LIES AND TRUTHS ABOUT THE M/V ESTONIA ACCIDENT

Anders Björkman ©

January 1998

Editions EGC

ISBN 2-911469-09-7

Imprimé par MultiPrint - Monaco, 1998.

"Das wenige verschwindet leicht dem Blicke,

Der vorwärts sieht, wie viel noch übrig bleibt."

J W v Goethe

This book is dedicated to my friends in Egypt, particularly MH

Content

INTRODUCTION

This is a book about the 'Estonia' accident in the Baltic Sea September 28, 1994. Many parties to the accident have given incorrect and misleading information to the public about the accident culminating in the publication of the Final Report (13) investigating the accident on December 3, 1997 (for references in (brackets) see chapter 7). A lot of information in this book is not mentioned in the Final Report. The suggested official cause of accident - water on the car deck of the *superstructure* sinking the vessel - is simply not possible. This situation has produced a fair number of conspiracy theories about the accident. It has also produced stupid and unsafe new SOLAS rules.

The layout of the book consists of short, numbered and cross-referenced [sub-chapters] in seven chapters, so that the reader can refer forward and backward between different and sometimes confusing official data and information of the accident. The accident itself is a mystery until a proper diving survey takes place, which establishes the condition of the hull, particularly i.w.o. the sauna and swimming pool frs. 98-110 starboard, and the forward ramp in the superstructure and what was loaded behind it. There are however many facts, based on the laws of nature, that cannot be changed, so that conclusions can be drawn now. In spite of this it seems that many parties of the accident have been changing facts and have introduced unbelievable fiction about the accident, since it took place.

The main fact is that a ro-ro passenger ship of the Estonia type cannot sink due to water on the car deck, [2.16, 4.16 and 5.5], in the *superstructure*! This may seem surprising to many people including expert naval architects and university professors. However, you have to distinguish between (a) sinking to the bottom (mostly due to leakage of the *hull*) and (b) capsizing and floating upside down on the surface with the keel up (mostly due extra weight above waterline - on deck or in the *superstructure*). The fact is that the 'Estonia' with water on the car deck in the *superstructure* > 2 meters above waterline should have capsized due to negative righting arm (GZ) and lack of residual stability before sinking could have taken place and should have floated upside down on the surface on its undamaged hull. As she did not do that, **it should be clear that there was no water on the car deck in the superstructure causing the accident.**

The 'Estonia' had a steel *hull* full of 18 000 m^3 of air below the watertight car deck - the top of the *hull.* The ship was floating in the water on this steel *hull* as per the principle of buoyancy of Archimedes established circa 252 BC.

The weight of the steel *hull* and all weights loaded on top of the *hull* was about 12 000 tons, so there was a margin of 6 000 m^3 of buoyancy below the car deck. **This margin was necessary to enable two sub-compartments of the *hull* to be flooded (in collision!) without causing the ship to sink and to provide stability, when listing.** Thus only about 5.1 meters of the *hull* was below water, when the 'Estonia' was floating. The margin of 6 000 m^3 provided a 'free board' of the hull of about 2.5 meters. The top of the hull was thus 2.5 meter above the water.

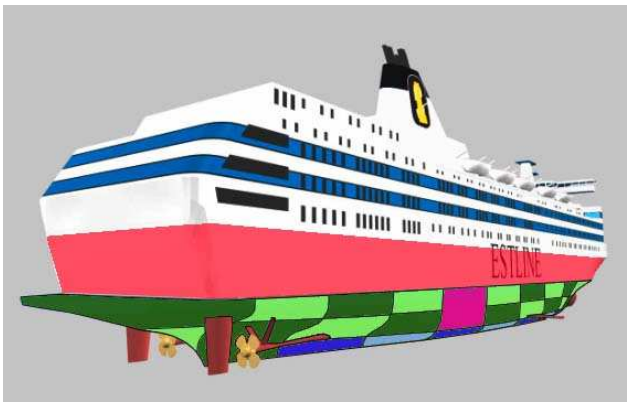

On top of the hull the 'Estonia' had a weather tight *superstructure* (marked red in the figure above) where you loaded trucks and cars - the car deck or garage.

On top of the superstructure is the *deck house* (white with blue stripes in the figure above) where most passenger cabins and public spaces were located.

Alleged water on the watertight car deck of 'Estonia' was thus inside the *superstructure* 2,5 meters above the waterline and could not flow down into the compartments of the *hull* below. Water (2 000 tons!) inside the *superstructure* on the car deck (extra moving cargo!) could only heel the 'Estonia', until she tipped upside down at about 34° list, when all the 18 000 m^3 of air became trapped inside the upside-down-turned underwater *hull*. **Water on the car deck could never force out those 18 000 m^3 of air, when the ship was upside down.** The 'Estonia' should have floated on that, slightly compressed, air after having capsized. This is a fact, which the Joint Accident Investigation Commission (JAIC or the Commission), an Estonian, Finnish, Swedish tripartite commission never understood and still does not understand! The Final Report does not even mention the air below the car deck. **It is very easy to prove with calculations that the 'Estonia' could not have sunk with water on the car deck.** The JAIC has not done the correct stability and water inflow calculations. It is even simpler to show with model tests, that it is impossible to sink the 'Estonia' with water on the car deck. Fill the car deck and see how the model turns upside down - then try to sink it! It is not possible! The JAIC never did any model tests of the sinking.

The Commission had quickly told a completely different story within three weeks of the accident, and one day *before* finding the visor 1 570 meter west of the wreck. The same story was repeated in the Final Report of the 'Estonia' accident (13), i.e. that poor locks of the ferry's bow visor caused the accident. The visor locks were broken by the wave loads, the visor had been ripped off in heavy weather, while the ship was underway on a westerly course Tallinn/Stockholm, **water had entered the *superstructure* at the forward ramp and flooded the watertight car deck and the vessel had rapidly lost stability and ... sunk**. The crew was not to blame too much. (This was quite obvious because you could not blame the crew for the design of the locks!). The Master had visited the bridge at 01.07 hrs, when all was in order (while at the same time heavy waves were ripping off the visor!) [4.2]. On October 24, 1997, Lloyd's List had published a statement by Mr. Laur that the final report should be published in early December 1997 and that there was no room for doubt (sic), what had caused the accident.

However, the JAIC theory is simply wrong. If the 'Estonia' with forward speed had lost its visor and pulled open the inner ramp, so much water would have quickly entered the superstructure, that the vessel would have been un-steerable and would have proceeded straight forward while listing to 34°, when she should have turned upside down in totally less than two-three minutes, [2.16, 4.16 or 5.5]. She would then have floated upside down on the undamaged underwater hull. This did not happen - survivors said that the 'Estonia' first listed abruptly almost 50° to starboard and, then, came back to a new equilibrium at circa 15° list, [3.16], and that it took a rather long time before the vessel was on the side and then sank. **To founder in such a manner is easy to associate with a massive leak below waterline and flooding of several compartments of the *hull* connected by open watertight doors.** The Commission has never bothered to investigate this cause of accident.

Why do I publish this book more than three years after the accident? Why did I not contact the Commission and why did I not discuss the matter with the members of the Commission in the spirit of IMO resolutions A.440 (XI) and A.637 (16) of free exchange of information and public hearings? Unfortunately the Commission refused to discuss anything about the accident with any outsider and **all meetings were kept secret for 38 months.** I met a member of the Commission, Börje Stenström, as early as end of October 1994 at the IMO, where we both were engaged to develop better rules for oil tankers, and told him that **the 'Estonia' could not have sunk due to water on the car deck in the *superstructure***. Stenström went pale and refused to discuss the matter. I met Stenström several times 1994/5 and he avoided carefully to discuss the 'Estonia'. In October 1996 Stenström informed that he never wanted to see me again (!). In April 1995 the Commission published its Part Report [1.17] and then I wrote to the Commission pointing out the message in this book. The Commission filed my letter in act F69 and never replied. Over the years I have attempted to discuss the matter with the Commission and it has always refused. In the summer 1996 I corresponded with an expert of the Commission, Bengt Schager [1.18], who said that the Commission had investigated the technical suggestions in this book and

had concluded that they were not relevant or wrong. Asking for further details was met with silence. August 7, 1997 I met the head of the Swedish delegation of the Commission - Ann-Louise Eksborg - in her office at Stockholm who promised that, of course, the Final Report was going to clarify the questions in this book, e.g. how the *hull* was flooded, so that the ship sank. Of course, the questions were not even raised in the Final Report. August 14, 1997 I met the JAIC stability expert, Dr. Michael Huss [1.18], and asked him how the 'Estonia' could have sunk with water in the *superstructure*. Dr. Huss refused to answer and left the meeting after accusing me of being *'conspiratorial'*.

Was it a Freudian slip on behalf of Huss? The reason I investigate the 'Estonia' accident is that I have designed six converted ro-ro passenger ferries for service in the Red Sea and that I am interested to know why the 'Estonia' sank. Many people, knowing my work, asked just that question. How and why did the 'Estonia' sink? When designing a ro-ro passenger ship, damage stability is very important. The old rules required only that the ship remained upright with two compartments of the hull flooded and without sinking with minimum extra, residual stability (area below the GZ-curve) provided by the *hull* and, maybe, the *superstructure*. The new (SOLAS 90) rules require that the ship must have additional residual stability after the worst possible accident. However, in neither case was water on the car deck inside the *superstructure* considered, because it was not a conventional damage stability case. Water on the car deck above the waterline is only extra weight *'loaded'* on the side of the garage tipping the vessel upside down (the *hull* is undamaged) - never sinking the ship. Increasing the built-in damage stability of a ro-ro passenger ship would never prevent tipping the vessel upside down. The 'Estonia' did not suddenly tip upside down - she listed 50° and then found a new equilibrium at 15° list and then took a long time before sinking [3.16]. Why? The answer is obvious - the 'Estonia' had positive residual stability and was leaking below the waterline flooding the *hull*! The fascinating fact is that the Commission always insisted that the 'Estonia' was not leaking below the waterline - the *hull* was allegedly intact. **Why was the Commission insisting on water on the car deck of the *superstructure* sinking the ship, when everyone should know that water on the car deck could not sink the 'Estonia' (only tip her upside down)?**

During the summer of 1996 I was not fully aware of all the other information presented in this book now. Then I wrote down my alternative cause of the 'Estonia' accident based on first principles of intact stability, damage stability, periodic and transient hydrodynamic wave loads on a bow above waterline, behaviour of ships with free water in a superstructure above waterline and in damaged compartments in the hull below waterline, the information given by Mr. Linde to Swedish newspaper Dagens Nyheter in October 1994, that the visor was found one mile west of the wreck [1.13], etc. **The theory was simply that the 'Estonia' had lost its stability due to inflow of water into the *hull* below the waterline (leakage)** and turned into the wind (south-west) and that the visor (in the *superstructure*) had separated later from the ship, when the 'Estonia', with a substantial list to starboard, had hit the flat visor side straight into the waves [2.23].

The first draft was sent to Mr. Bengt Schager for comments. Mr. Schager friendly added some useful information to my theory but told me that all was wrong. He said that the Commission had investigated my theory (all alternative causes) and that it was wrong.

I refined the draft and sent it to the biggest Swedish newspaper, Dagens Nyheter, which published it on August 15, 1996. The same day the Commission told Swedish news agency TT **that the article was *'un-intelligent gibberish based on un-scientific methods by an un-reasonable person'*.** The rhetoric confirmed my certitude that the Commission was not serious in its work to find the truth of the 'Estonia' disaster*, 'wie es eigentlich gewesen ist'.* Therefore I continued to improve the scenario, a summary of which Lloyd's List published in November 8, 1996. After that I received a lot of information and various documents used in this book, which further support my suggested cause of accident. The German Group of Experts gave very valuable information, i.e. a completely different time of the first abrupt listing and a completely different description of the listing itself based on survivors' testimonies. All that information fitted nicely into my theory.

You would expect that the IMO and various National Maritime Administrations would be interested in the details of the 'Estonia' accident. IMO reacted quickly in 1994 and a Panel of Experts made at least 30 changes to the SOLAS safety rules based on the conclusions of the Commission in March and April 1995 and these were adopted by the IMO Marine Safety Committee as regulations to enter force from July 1, 1997. Never before had so many safety rules been adopted in such a short time. But were they any good? Correspondence with the relevant parties was disappointing - it seems nobody was prepared to stand up and defend, or just explain the logic behind the new safety rules. The reason is simply that there is no logic behind the new safety rules [chapter 5] and that nobody is prepared to say so. This prepares the ground for conspiracy theories [chapter 6]. I do not believe in any conspiracy. I think that the crew of the 'Estonia' forgot to close the watertight doors in the hull, when 'Estonia' sprang a leak. I believe an incompetent Commission never thought of the possibility that leakage of the hull below waterline sank the 'Estonia'.

Dagens Nyheter asked the Commission twice in editorials during 1997 to investigate or just comment upon my theory. The Commission decided to ignore the requests. Many people wonder why the Commission is so afraid of investigating a water leak below waterline of the hull as the cause of the accident. Many ships that sink at sea were leaking, so it is a logical risk to investigate.

I hope that this book contributes to several things. First that there is a new dive survey of the 'Estonia' to establish, if the vessel has a hull damage on starboard side forward below the waterline (in the bottom or in the vertical side), and, if so, that a new accident investigation is done. Second that the IMO review all the safety rules [chapter 5] that were quickly (and badly) amended after the 'Estonia' accident based on the assumption that there was water on the car deck. Third that the IMO issues new rules how international accident investigations should be carried out, as the 'Estonia' investigation ignored all rules and conventions.

Anders Björkman, M.Sc., Naval Architect,

6, rue Victor Hugo, F 06 240 Beausoleil, France

January 1998

CHAPTER 1 THE ACCIDENT

1.1 THE 'ESTONIA'

Some particulars of the ship 'Estonia' from the data book of Lloyd's Register 1994 are listed below.

Loa 155.43 meter,

Lpp 37.42 meter,

B 24.21 meter,

d 5.50 meter,

D 7.62 meter,

GT 15566,

N T 8372,

Dwt 3345 ton,

Inner ramp: length 7.0 m, width 5.4 m.

An Estonian/Swedish joint venture company, Estline, operated the ferry. The ferry was registered in Estonia.

1.2 THE DEPARTURE SEPTEMBER 27, 1994 FROM TALLINN

One survivor (CÖ) told Swedish newspaper Dagens Nyheter November 30, 1997 that when he was embarking the 'Estonia' on the afternoon of September 27, 1994, he found that the Tallinn port area was sealed off and that his friend in his car could not drop him at the ship in the normal way. CÖ had travelled twenty times with the 'Estonia' and this was the first time he had this problem to join the vessel. CÖ went to the reception aboard and tried to get a cabin and after a long wait he got a bed in a cabin no. 1049 on no. 1 deck below the car deck. CÖ states more than three years after the accident that he thought that all the crew behaved differently than at all previous trips.

Another survivor (LB) has written a book about his experiences before, during and after the accident, that the Commission has ignored, but he does not mention the observations of CÖ. LB had a car, which he parked on the car deck, and had a cabin on deck no. 5. Many other cars, lorries and trailers were loaded and the car deck was almost full. It has been established that, due to confusion or bad cargo planning, the 'Estonia' was listing to starboard at the end of the loading. To sail upright the port trim tank was filled.

The Swedish Maritime Administration was training Estonian PSC (Port State Control) surveyors in the port of Tallinn at the time and they had visited the 'Estonia' during the afternoon. The bow visor was in the open position and the inner ramp was down and the group noted that some rubber packings were missing. No action was taken.

The ship left Tallinn around 19.00 hrs and then the inner ramp and the visor itself had been closed. The last voyage of the 'Estonia' had begun.

1.3 THE ACCIDENT AND THE INVESTIGATION

On the night September 28, 1994, the ferry 'Estonia' then sank in the Baltic Sea en route between Tallinn, Estonia, and Stockholm, Sweden. 852 people died including more than 500 Swedes. During a meeting on the same day at Helsinki, Finland, September 28, 1994, the prime ministers of Estonia, Finland and Sweden decided that a Joint Accident Investigation Commission (JAIC or the Commission) should be formed to investigate the accident. They also decided that the chairman of the Commission should be Estonian. They did not agree anything else, e.g. that the Commission should follow the working rules and procedures of the IMO.

Five days later, October 2, 1994, searchers found the wreck at 70 meters depth and fixed its position [1.13]. The wreck was in international waters but inside the Finnish economic zone. A remote control underwater camera was sent down and the ship's bow door (the visor) was found missing. **The search for the visor started, but it was not found until October 18, 1994, 1 570 meter West of the wreck, because they searched for two weeks in vain East of the wreck.**

Note August 2000 - correction - the wreck was in fact found with echo-sounder already on September 30, 1994 by the Finnish ship the 'Suunta'. A false wreck position was later announced 2 100 meters NE of the real one. The visor was therefore >3 000 meters from the false wreck position. If the visor position was correct is another question. JAIC could never explain how the visor could have been lost there.

Note January 2001 - addition - it is probable that the visor was found adjacent to the wreck on the same day September 30, 1994 visor on bottom. Four sonar pictures were taken of the wreck and the surroundings. On all four pictures a pyramid shaped object was seen, which Dr. Nuorteva, a Finnish scientist, thought was the visor. The object was filmed by an ROV on October 2, 1994. The Commission did not elaborate what the object was and the film has later been edited. Instead the head of the Finnish delegation in the Commission - Mr. Lehtola - announced a false position of the wreck [1.13]. The object was filmed a second time by an ROV on October 9, 1994 and four films were made and registered under act B2 in the Swedish archive, where it was stated that the films were i.a. of the visor. A fax exchange between two Commission members were made on October 10, acts I15 and I16 in the Swedish archive, about the visor, the two members then looked at the four films, act B2, on October 11, where no doubt they could see the visor. These films have also later been edited not to show the 'object'. Furthermore, on the same day the Commission informed the media that the visor had not been found and that the search continued. However, no real search was done by ships between 12-17 October and then the visor was allegedly suddenly found on October 18 by a Finnish ship [1.13]. It is probable that the visor was found already on September 30, 1994. The four films in act B2 do not exist anymore. Act B2 consists today of two 'original' films and one 'summary'! The faxes I15 and I16 exist and refer to an attached *'picture'* showing i.a. the visor. However, the attached 'picture' today does not show any visor. It is instead a sketch of the bow of the wreck with no visor.

1.4 THE COMMISSION

The members of the Commission were announced on October 10, 1994 at 17h00 (GMT+2) as follows (1):-

Estonia

Andi Meister, Chairman, Minister of Transportation and Communications

Uno Laur, Member, Master Mariner, Merchant Marine Consultant

Indrek Tarand, Member, Permanent under-secretary, Ministry of Foreign Affairs

Finland

Kari Lehtola, Member, Director, Disaster Research Planning Committee

Helmo Iivonen, Member, Managing Director, Sea Rescue Service

Tuomo Karppinen, Member, Senior Research Scientist, Hydrodynamics

Sweden

Olof Forssberg, Member, Director General, Board of Accident Investigation

Hans Rosengren, Member, Captain, Technical Nautical Investigator

Börje Stenström, Member, Naval Architect, Chief Maritime Investigator

Other experts and observers were also then, and later, appointed to assist the Commission. Denmark and Norway got observers. Germany, where the ship was built, was excluded from the Commission. The public was never invited to attend any hearings. The president of the Swedish Master Mariner's Association was refused access to the meetings, when he tried to attend. It was also stated that:

> *'the Commission's terms of reference depend on finding and inspecting of the Estonia's bow door which will determine the course of future activities'.*

The Commission ignored completely any terms of reference given by the Estonian, Finnish and Swedish prime ministers, because only one week later, before even finding the visor, it told the public what had happened! [1.7 and 1.10]. The next meeting of the Commission was decided to be at Tallinn on October 17, 1994.

Actually the members of the Commission had appointed themselves already on September 29 at an informal meeting held at Turku, Finland (3). The provisional Commission had then made its first public statement already on October 4 - a First Interim Report - stating that the accident was caused by water collecting on the car deck. In retrospect that report was complete guesswork - a simple stability calculation should have shown that water collecting on the car deck could not have caused the accident.

1.5 CHANGES TO THE COMMISSION

Only 30 minutes after the announcement of the Commission the Foreign Ministry of Estonia issued a correction (2) to the appointments. Indrek Tarand of Estonia was replaced by Enn Neidre - Member - Captain, Estonian Shipping Company.

1.6 CONFLICTS OF INTEREST

While the Swedish and Finnish members were civil servants, mariners, educators and consultants who previously had been involved with accident investigations in their respective countries and had no relation at all with the vessel of the accident, the same cannot be said of the Estonian members, none of whom had ever participated in a casualty investigation.

Andi Meister was, politically responsible for safety at sea in Estonia, and formally head of the government Estonian Shipping Company (ESCO) owning the vessel.

Uno Laur was introduced as the managing director of the Average Agency CMM, an ex ESCO employee and an experienced maritime specialist. It was not said that he was the predecessor of Enn Neidre at ESCO.

Enn Neidre was the head of the Navigation Department of ESCO and Safety Advisor of Estline and the supervisor ashore of the crew of the vessel.

The Estonian prime minister had appointed three persons, who were very much involved with 'Estonia' and its operations and safety to investigate an accident to the same ship. The Finnish and Swedish members did not complain about this conflict of interest among the Estonian members.

1.7 THE MEETING OCTOBER 17, 1994, (PART I)

At the meeting at Tallinn October 17, 1994, the Commission reviewed new information available to it as a result of additional video films taken from the sunken ship and confirmed two things in a Second Interim Report (4) signed by Meister, Forssberg and Lehtola.

1. The visor was lost underway.

2. Water entered the car deck at the forward ramp.

The visor had not yet been found, and naturally, it had not been inspected, when the Commission stated this! [1.4]. **Even if the two conclusions seemed innocent and obvious, in retrospect one can conclude that (A) the visor was not lost underway, and (B) water did not enter the car deck at the forward ramp.**

1.8 THE VISOR WAS NOT LOST UNDERWAY!

The reasons for this suggestion are

(1) that underwater videos of the wreck could not show when the visor was lost and

(2) that the visor was found the next day almost one nautical mile west of the wreck according to Lloyd's List October 20, 1994.

'Estonia' had been on a westerly course from Tallinn to Stockholm, so a rational person would have expected to find the visor southeast of the wreck, if it had been lost underway. The search of the visor started east of the wreck and the visor had not been found for two weeks. When the visor was found West of the wreck, it was clear that the ship may have listed and turned first and lost the visor later, and finally the vessel could have drifted back to sink at the position, where the wreck was found. Alternatively, the vessel may have turned before the accident and was heading back to Tallinn, when the visor was lost - in either case evidently the vessel was not underway to Stockholm anymore [1.13].

It is likely that the first statement about the accident by the Commission was not true or a guess. The visor could have been lost after the real accident took place that is because of the accident, when the ship was not any longer underway to Sweden.

1.9 WATER DID NOT ENTER THE CAR DECK AT THE FORWARD RAMP!

It is not clear how the Commission could have made its second statement based on some underwater video films.

The forward ramp (or the bow ramp, or the inner ramp - the Commission uses different words) was found in a closed position at the wreck as seen from outside by remote controlled underwater cameras.

Divers had not yet examined the forward/inner bow ramp from inside. (It was never done, [1.14, 4.8 and 4.11]). In Stern 18/96 (8) Forssberg stated that the ramp opening was too small for a diver to enter into the garage and that cutting away of steel structure was necessary (which was why the interior of the garage was never examined). Other information says that the seven meters long inner ramp was open 60-70 cms or much less at its upper part (it was hinged at the car deck). The Commission was very vague regarding how open the ramp was.

There was no proof whatsoever on the videos available to the Commission on October 17, 1994, that water had entered the car deck at the forward ramp as the ramp was almost closed [1.15.5]. Furthermore, it was evidently not clear from the videos, if/when the forward/inner ramp had opened up a little - underway, before the accident, after the accident or when the vessel sank to the bottom [2.21 and 4.11]. **What was the accident?**

Three engine crew members in the soundproof engine control room (ECR) amidships, 3/E Treu, a motorman and a systems engineer, had said to the Estonian police (Priit Männik? [1.18]) that they had seen water entering at the forward ramp on a TV monitor of the garage in the ECR. 3/E Treu said it was at 01.15 hrs, *before* the vessel started to list, the others said that they saw the water in the garage after the list had occurred. Further questioning of these crew members at a later stage by the Commission, March 1995, has shown that their statements are contradictory, suggesting that they may have been mistaken. The systems engineer later retracted his statement completely (10) [4.23].

Note August 2000 - in fact the systems engineer had already told the Commission on 28 September 1994 that the ship was leaking, that the bilge pumps were running and that the sudden listing occurred when the car deck forward ramp was still in place (as seen on the supervision monitor at least two minutes after the listing).

Much later he provided the sketch right of what he saw at least two minutes after the sudden listing, i.e. a closed but leaking ramp.

You wonder of course if he really saw what he has sketched - at the time the ship was listing about 15° and, according to other info, trucks and lorries were parked inside the ramp, so that you could only see the tops (roofs) of the trucks on the monitor and not the ramp itself.

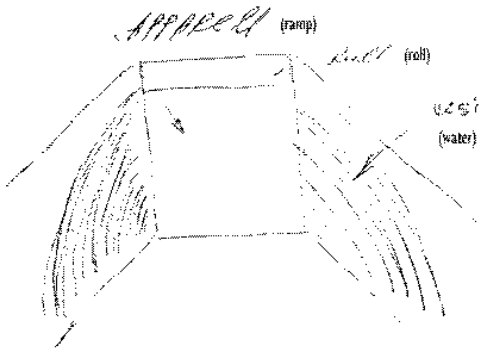

So even the second confirmation of the Commission was not true. Could attending members of the press and mass media have imagined that the Commission started its presentation of the 'Estonia' accident with two false statements?

1.10 THE MEETING OCTOBER 17, 1994, (PART II)

The Commission also presented the cause of accident at the meeting (4). **Thus, only nineteen traumatic days after the accident, when the Commission met for the second time, the cause was known!**

How could the Commission have found the cause of accident so fast? The diving underwater survey of the wreck had not started, the visor had not been found nor inspected, no suspect parts of the wreck had been salvaged and investigated, the 137 survivors had not been interviewed, no stability calculations had been done, etc. Many survivors had given early statements, that water had been seen on deck no. 1 before the first abrupt listing, but these statements were ignored by the Commission. No statement confirmed water in the garage, unless you believed what one junior engineer in the control room said that he had seen on a video display of the garage.

What normally takes many months or even years to do, the Commission did in less than two weeks during two meetings. A record?

It is not known if the Commission discussed any other causes of accident than the one that was presented on October 17, 1994, as 'one *of the most probable causes of the accident*'.

1.11 *'ONE OF THE MOST PROBABLE CAUSES OF THE ACCIDENT'*

The heads of the three member nations of the Commission, Meister, Lehtola and Forssberg, signed a document (4) that was forwarded to the government of Estonia, the Council of State of Finland, and the Swedish National Maritime Administration. It said:

> *1. The bow door (visor) has separated from the ship as a result of failure of all three locking mechanisms. According to the observations made by members of the crew this happened at about 01.15 when water was simultaneously observed on the TV-monitor, entering the car deck from openings along the vertical sides of the forward (/inner - my note) ramp. The failures have taken place, in case of the two side locks, in the welding of the locking eye plates to the bow visor and in case of the centre lock (as previously shown) by failure of the lugs carrying the locking plunger unit.*
>
> *2. Following the failure of the locking arrangements the bow visor has opened up under the wave loads. The deck mounted hinge points have eventually failed as a result of uncontrolled movement of the 55 tons visor, leaving it attached only by hydraulic actuating cylinders.*
>
> *3. During the subsequent unrestrained movement of the bow visor it hit the bow ramp (the forward/inner ramp - my note) in several modes, including hits from the rear to the upper protrusion of the ramp, causing it to become dislodged from its locking arrangements and to move to a partly open position. The bow visor has ultimately separated from the ship and disappeared overboard.*
>
> *4. Partial opening of the (forward/inner - my note) ramp had allowed water to enter the car deck due to heavy sea. Collection of water on the car deck eventually led to the loss of stability and capsizing of the vessel.*
>
> *5. After the vessel had turned over to almost 90 degrees starboard list, which is estimated to have taken place in less than twenty minutes after the damage to the forward ramp (or bow ramp - my note), it started to sink with the stern first. The ship disappeared from the radar screen of a Finnish surveillance station at 01.48.*
>
> *6. The vessel turned during the phase of losing stability and landed on the seabed with an almost easterly heading. It is assumed at this stage that this was partly an attempt by the officers on the bridge to turn the ship around and partly by the wave action after the ship had lost propulsion power.*
>
> *7. The locations of the EPIRBs have not been found during the video documentation and their status is therefore not known at the present time.*
>
> *8. Emergency MAYDAY signals were sent by 'Estonia' at 01.24 and were received by ships in the area and the MRCC at Turku.*

No other possible causes were mentioned then or later by the Commission to the governments of Estonia, Finland and Sweden. Nobody in the governments has ever questioned and inquired into the work of the Commission, if it meets acceptable international standards. The writer made the following analysis before the Final Report (13) was issued:-

1.12 HOW THE IMO WAS MISINFORMED BY THE COMMISSION

Item 1 is mainly observations that three locks have burst and how. Regarding the time 01.15 hrs it must be noted that many surviving passengers (11) had given a completely different time, 01.02 hrs, for another earlier event - abrupt listing of vessel first 50° to starboard and then back to upright and then to about 15° starboard list [3.16] - which was not mentioned by the Commission then or later (13). It is a fact that nobody saw, heard

or felt that the visor separated from the ship, so the time for that event cannot be given. 3/E Treu [1.9] had said that he saw water entering the garage at the forward ramp at 01.15 hrs *before* the vessel listed. Considering the passengers' statements the vessel was probably already listing 40° then. 3/E Treu has later been found to give contradictory statements, [1.19, 1.22, 4.7 and 4.23].

Item 2 is a suggestion that the visor flipped up and down around the hinge points. There is no proof whatsoever, that it happened. Nobody witnessed such an event [3.9]. You wonder how the Commission could have made up such an idea. One passenger, V. Kikusts, a Latvian police officer, stated that he saw the visor flipping at 00.26 hrs, i.e. 49 minutes before Treu saw water enter at the forward ramp. Kikusts never warned the crew at the time (10).

Item 3 is correct, if the visor separated from the ship in the upright condition; then it must have hit the forward solid ramp from the rear [3.10]. It is then probable, if the top part of the visor is stronger than the ramp, that the visor pulls out the forward ramp completely 80°, after the locks/securing cleats and hydraulics of the inner/forward ramp are broken. The commission gave this impression orally. However, the forward ramp was found only opened 8-10° - (60-70 cms at the top) or much less, 1° or 10 cms; it was partly open according the Commission [1.11.4]. In my opinion the ramp was almost closed. This indicates that the visor may have separated, when the ship had >35° list, when it was hit from the side by a transient impactive force [2.8]. Interestingly enough internal stiffeners of the upper protrusion of the visor and its thin steel cover plate are hardly damaged [4.10] - the port stiffeners are only bent a little. Why was the aft end of the visor top not more damaged, if it had forced open the inner ramp? It should be recalled that the Commission wrote item **3 before it had located the lost visor**, so it is not clear how the Commission could have stated, that the lost visor had hit the ramp from the rear, etc. The Commission had not seen the visor top! The ramp top is not damaged.

Item 4 is most deceptive. The forward ramp was said only to have been partly open. Then much water could not have entered the car deck, even considering heavy seas (the heavy seas would push closed the forward ramp) [2.19]. Members of the commission stated orally that the inner ramp was completely pulled out by the visor, [2.21 and 4.23]. Nevertheless - as the ship was listing about 1° to starboard due to a SW wind, any water entering the garage should have collected on the starboard side of the garage/vessel and gradually increased the list of the ship, unless it drained out through the scuppers in the deck. However, what surviving passengers state is, that there was a temporary loss of stability, when the vessel suddenly first listed 50° to starboard, and then stability clearly was regained at 15° list to starboard [3.16]. Thereafter, the vessel was only very slowly heeling over, until it was on the side. The Commission stated - quote:

> *'Collection of water on the car deck eventually led to the loss of stability and capsizing of the vessel.'*

However, water on the car deck should always have led to the vessel heeling to a certain critical angle - about 34°, after which the vessel should have tipped upside down and floated with the keel up, [2.16, 2.19 and 5.5]. **The Commission never made any stability and righting arm calculations before issuing its statement!** It should be clear to anyone that there could not have been any water on the car deck, because the vessel never tipped upside down.

Item 5 - First is should be noted that with 90° list, the 'Estonia' should have tipped upside down. The Commission did not know that the vessel could not float with 90° list! The Commission then stated:

> *'The ship disappeared from the radar screen of a Finnish surveillance station at 01.48'.*

This meant that **the 'Estonia' was under observation from shore** and you evidently wonder what this observer saw before 01.48 hrs. Finnish and Swedish newspapers reported October 1 and 2, 1994 that 'Estonia' was off course when the accident took place, and this information can only have originated from the Finnish shore radar observer. However, later the information was retracted. The Commission has never informed, what the

shore observer saw before 01.48 hrs, e.g. when and where the 'Estonia' changed course, slowed down, stopped, drifted, etc. [4.20].

Note August 2000 - according to later information the Finnish surveillance station at Utö did in fact plot the 'Estonia' and other ships on its radar screens prior to the accident and this plot was handed over to the Commission. However, later the plot disappeared, because it didn't tally with the sequence of events invented by the Commission!

Item 6 - it is evidently impossible that a SW wind/wave action turned the vessel (to port). See also [1.13] and Forssberg's statement about the vessel's course and speed after the accident, and figure [2.23]. And how did the Commission know that the vessel turned after losing the visor? Why could the vessel not have turned before it lost the visor? According to the Commission nobody observed the 'Estonia' prior to 01.22 - 01.24 hrs, so nobody could have known that the 'Estonia' had turned after it lost the visor at 01.15 hrs. Finnish shore radar and any vessel including the 'Mariella' and the 'Silja Europa' reportedly did not observe the 'Estonia' prior to 01.22-01.24 hrs. According to the 'Mariella' the 'Estonia' was immobile in the water at 01.24 hrs in a position, which later (when the visor was found) turned out to be one mile south of the visor. Who could have seen that the 'Estonia' turned after losing the visor, when it was not known where and when the visor was lost?

Unfortunately, no open discussion of the Commissions cause of accident or events before and after the accident was possible in October 1994. The public had to believe the Commission. The IMO had adopted two resolutions about casualty investigations. Resolution A.440 (XI) says that all the details of the accident shall be circulated to the members of IMO and resolution A.637 (16) says that the hearings and all protocols, etc., shall be public. Two obvious questions are? Did the Commission intentionally misinform the public and the IMO in October 1994? Why was all information confidential and/or secret? It seems we will never know, unless there is a new investigation.

1.13 THE VISOR

The visor was found on October, 18, 1994, about one nautical mile to the west (!) of the wreck (as reported by Lloyd's List October 20, 1994). Its position was later determined to abt. N59°22',97, E21°39',33 ± abt. 100 meters according to a message from the Swedish Navy December 9, 1994.

The wreck was first reported at N59°23'54.60", E21°42'10.20". This position was later modified to an 'as found' position of N59°22'56.13", E21°41'00.98". These two positions are 2 112 meters apart. The heading of the wreck was 95°, i.e. the bow pointed approximately to the east. The visor was thus about 3 150 meter from the first wreck position and 1 570 meter from the second wreck position or abt. 2 600 m west of the first wreck position and 1 570 meter west of the second position. It was also concluded that the visor was one mile north of the Mayday position.

In spite of this confusion it is sure that the Commission knew early that the visor was found well west of the wreck and north of the Mayday position!

Note August 2000 - the Commission knew very well the correct wreck position already on September 30, 1994, but the Finnish head of delegation - Kari Lehtola - 'isolated' the wreck by announcing to the media the false wreck position 2 112 m NE of the real position. The reason for this was probably that the same ship that found the wreck also found the visor adjacent to the wreck! For unknown reasons the Commission did or would not admit this as they apparently planed to blame the accident on the visor. There are strong reasons to believe that the official visor position was also false, e.g. the Commission never announced the exact position of the visor on October 18, 1994; only that it was about one nautical mile west of the wreck, the position of which was then incorrect - 'isolated'. The visor position determined by the Swedish Navy was that of a red buoy allegedly anchored on top of the visor.

Addendum 4 January 2001 - the above thoughts were further confirmed in December 2000 when a sonar picture of the wreck and visor (!) made 1996 was published. One reason for hiding the fact that the visor was found adjacent to the wreck already on September 30, 1994, may be the fact that all four key witnesses of the crew had previously (on the day of the accident before the wreck was located) stated that they saw the visor missing at the bow when the ship was sinking. Thus, when the visor was in fact found adjacent to the wreck, these

testimonies were easily proven false. To protect the lying witnesses the Commission apparently decided not to inform the public that the visor was found adjacent to the wreck.

In Stern 18/96 (8) Forssberg stated that:

> *"the Commission knows the two positions, where the visor and 'Estonia' sank. From the distance between the two points can the course and the speed of the ship be calculated".*

The reader is referred to figure [2.23]. According to Forssberg the course of the ship at the accident was 90° (i.e. due East!) and the speed was 1 570 meter in 40-45 minutes i.e. about 1 knot! Was 'Estonia' underway between Tallinn and Stockholm in these circumstances? In the Final Report (13) the ship changes course 180° to port after losing the visor [4.20].

The visor was salvaged end November and brought to Hangö, Finland, where it can still be seen today. No efforts to preserve or protect the visor were taken.

1.14 THE DIVING SURVEY DECEMBER 3 AND 4, 1994

A diving survey of the wreck was carried out December 3 and 4, 1994 by the Norwegian company Rockwater A/S for a cost exceeding US$ 1 million. The Swedish maritime authority paid for the survey to establish whether dead bodies and/or the whole wreck could be salvaged. The Commission was invited to inspect the wreck for damages that caused the accident. Stenström was in charge. It seems however that the Commission's survey was done only to confirm its cause of accident [1.11]. Below items have been established based on different sources.

(i) Three bodies on the bridge were never identified [1.22].

(ii) The positions of the garage video monitors on the bridge were not checked.

(iii) The chart room next to the bridge was never searched.

(iv) The Master's, Chief Engineer's and the Radio Officer's cabins were never searched.

(v) The inside of the forward ramp and its control and locking equipment were not checked. The allegedly damaged locks of the inner ramp were not seen [4.11].

(vi) The car deck was not examined. Actually the whole garage was not entered into as the forward ramp was closed [4.8].

(vii) The control panel of the inner ramp and the visor on the car deck was not examined.

(viii) There was no attempt to examine any spaces on deck no. 0 and to verify the position of the watertight doors [4.8].

(ix) The whole starboard side of the ship was not examined (as the wreck was resting on the starboard side to the bottom - no attempt was done to do the job from inside).

(x) Even if the remaining hull parts of the visor locks and hinges were partly recorded on video no effort was done to cut out the relevant parts for detailed study ashore. The side locks' lugs and part of the hinges torn off from the visor were left at the bottom of the sea.

(xi) It seems to have been very difficult to enter into the garage as the inner ramp was only partly open [1.12.3]. You wonder then how this ramp could have been open during the accident to allow several

thousand tons of water to enter and then how it had closed itself not permitting a diver to enter to examine the inner ramp from inside the car deck.

(xii) It is peculiar that the complete bottom hull was not investigated from inside as water had been reported by many survivors on deck no. 1 below the car deck, and it should have been established where this water came from. Even if it was difficult to enter the car deck at the inner ramp, it was of course possible to enter any other space inside the ship through the stairways. It is assumed that the fire doors between the car deck and the stairways are still locked. The Commission has always maintained that the water in the garage flowed down to deck no. 1 through the closed, locked and smoke-tight fire doors and this possibility should have been confirmed in-situ.

Note August 2000 - the dive survey was never fully reported. Divers were inside the ramp and in the garage. One diver also inspected the sauna space on deck no. 0 from inside. The aft ramp starboard ramp was apparently found partly open, etc. etc. The video films taken during the dive survey were therefore edited before being published. Many damages and observations went unreported. Also the divers spent a lot of time looking for a suitcase in one of the cabins under direction of Swedish police, which was not reported until a Swedish newspaper, FinansTidningen, published an article about it in 1999.

Note January 2001 - Swedish media has reported 2000 that five Swedish divers visited the ship earlier - probably already 2-9 October 1994. What these divers did is not known. One possibility is that they applied explosive devices on the bow to separate the visor from the wreck and attempted to blow the ramp open part 6. In August 2000 private divers filmed the forward collision bulkhead starboard side. They found a big opening - hole - in the bulkhead three meters below the focsle deck - se picture right, which has never been reported by the Commission. This opening could not have been caused by falling off of the visor. What caused it? Explosives? When and why?

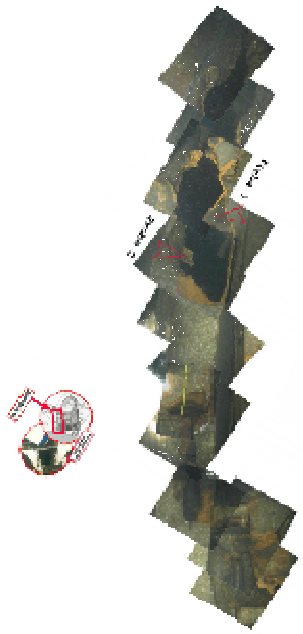

There was a second visit to the wreck by underwater cameras in the summer 1996 when the bunker oil was removed from the vessel by a Finnish specialist company. It was known that 400 tons of fuel oil could be removed from the ship, even if it was almost solid due to the +2° temperature inside the wreck. However only 230 tons were found and pumped up, when the equipment failed. Divers from Holland might have visited the ship and might have been inside the garage the summer 1996 to prepare for the covering of the wreck. Details are not known.

1.15 THE MEETING DECEMBER 15, 1994

The Commission met at Stockholm, December 15, 1994. The Commission then confirmed in point 3 of the Press Release (5) that **the strength of the locking devices for the bow visor in combination with the sea load on the visor in the prevailing wave condition and headway of the ship is the main cause of the accident.** Point 5 of the Press Release is quoted in its entirety here:

> *5. The diving investigation carried out on the wreck has revealed that the ramp was locked in closed position prior to the accident. After loss of the visor the ramp has been significantly more open than the present position on the wreck, at least during some phase of the development of the accident.*

How the Commission could have concluded after the diving inspection that the ramp was locked in closed position before the accident is not known. **How could divers establish how the ramp had been locked nine weeks earlier?** As shown above the divers did not even examine the inside of the forward ramp, where the locks are located [1.14 (v) and (xi)].

It is not known how the Commission managed to conclude that *'the ramp has been more open than found at the bottom of the sea, at least during some phase of the development of the accident'*. This statement is very odd - according to the second interim report [1.11.4] we should believe that the inner ramp opened up more during the accident than found at the bottom, whatever that means, allowed 1 100 tons of water to enter the garage so the 'Estonia' listed suddenly 18-20°, and then, when the vessel was still afloat or had sunk - we do not know what *'at least during some phase of the developments of the accident'* means - we are told that the ramp closed again to a partly open position, [2.19 and 2.21].

Note August 2000 - later observations of the underwater videos tend to confirm that the ramp was (a) not locked before departure (it was held back by ropes) and (b) had never been pulled open by the visor. The reason why the Commission on December 15 stated that the ramp had opened up completely and then closed itself during the accident was that sufficient water to sudden list the ship could not enter a partly open ramp - it had to be fully open. But the JAIC did not then understand that the 'Estonia' would tip upside down within seconds with a fully open ramp.

1.16 STRENGTH INVESTIGATION OF THE VISOR LOCKS

Another remarkable thing about item 3 of the press release December 15, 1994, is that it states that the strength of the locking devices is the main cause of the accident. However, it was not until December 19, 1994, that the Commission ordered the Royal Institute of Technology, Stockholm, to carry out a very limited strength analysis of the visor locking devices (6). The result of this analysis was only ready much later and was still not completed 24 months later [1.21].

The request by the Commission is quite revealing how the dive survey was cut short. The Royal Institute was requested to investigate the plates of the visor, where the side lock lugs were welded. Then it says: *'The lugs remain on the wreck and cannot further be examined'.* You wonder why these small lugs, which apparently were detached from the visor, and the locking bolt and the hull lugs had not been brought up to the surface for examination by the divers! In a previous letter (7) from the Finnish materials and structural integrity company VTT dated November 29, 1994, i.e. four days before the dive survey was done, it was suggested and the suggestion is underlined/bold in the letter:

> *"For complete investigation and modelling, the side locking lugs and broken halves of the Atlantic lock should be recovered from the wreck."*

However, the Commission decided to leave these vital parts of the investigation at the bottom of the sea. It means that the Commission could not determine the condition of the side locks just before the accident, which shows the incompetence of the Commission.

To do a strength analysis of the visor locks, apart from establishing the actual 'as is' condition of the locks, it is first necessary to establish the environment where the locks were used and the loads (demand) applied on the locks. The weather was not very severe (SW force 7). It seems that only a very rudimentary (hydrodynamic) load calculation was done of the total load on the visor by a periodic hydrodynamic wave load. However such a simple estimation does not say how much load is transmitted by each lock, each hinge and each of all the other contact points of the visor to the hull and in what order the locks and hinges break.

In this case the Commission only assumed that an external periodic load acted on the visor in the upward and aft directions. The Commission never investigated if the load could have been internal (added weight of water

that had leaked into the visor as suggested by the Germans) acting downward and forward. The Commission never thought that the load might have been sideways (transient impactive load = 10 times bigger than any external periodic wave load) when the vessel was already listing.

When the strength analysis is finished you have to check the result against criteria of acceptance. If the strength does not meet the criteria, there is failure.

There are two types of failure - fractures and ductile failure.

Fractures occur at lower excessive loads. Ductile failure (deformation, rupture) occurs when the load is really excessive. In this case the Commission stated that ductile failure had occurred, i.e. the loads had been excessive tension and the connections of the locks had been ripped apart.

The Commission never answered the obvious question, why the locks had never only fractured and/or deformed earlier under less severe loads, if the design of the locks was so bad as alleged. No check of fractures was ever done.

Anyway, the *'strength analysis'* was just window dressing by the Commission, as it had already stated its result before it was ordered to be done by the Royal Institute of Technology.

1.17 THE PART-REPORT APRIL, 1995

The Part-Report, April 1995, is a technical document (9). It is the only part-report ever issued by the Commission. As it was known before the Part-Report was issued, that it declared the builder of the 'Estonia' responsible for the design and manufacture of the alleged faulty locks, the shipyard had some time earlier suggested to the Commission that the visor may have separated from the ship due to another cause. The shipyard simply stated that the maintenance of the visor had been deficient during the fourteen years after the ship was delivered and that the strength of the visor outfit had suffered. It added that due to bad maintenance the visor was leaking, that it then filled up with water during heavy weather, and that the weight of the water might have broken the hinges of the visor and that then the visor tipped forward and broke the locks, etc. The Commission dismissed this theory without comments. Instead, the Part-Report said:

> *'The Commission has previously concluded that the accident was initiated by the locking devices for the bow visor being unable to withstand the loads imposed during the prevailing speed, heading and sea conditions. This conclusion is still valid'.*

And:

> *'The content of the current Part-Report may be amended and editorially modified as part of the Final Report, but it is anticipated that all facts and conclusions reported herein will remain unchanged in substance'.*

It was now only six months after the accident. The Commission had explained everything in the open, but the public had had no possibility to evaluate what the Commission had said. The extra-ordinary cause of accident declared only nineteen traumatic days after the accident was upheld as truth. **The visor had separated from the vessel** when it was underway (vessel was otherwise un-damaged) at 01.15 hrs. **Water had entered at the inner ramp** (even if the ramp was found virtually closed on the wreck). **The vessel had capsized**, i.e. turned belly up, and had sunk (while all survivors had only suddenly experienced an abrupt list to 50° starboard, after which the vessel re-gained stability at 15° starboard list and only slowly sank permitting over 230 persons to

abandon the ship and 137 to survive). Everyone expected the Final Report to be a formality to be published a few months later as promised.

But the Final Report was still not published 30 months later.

The Part-Report was very easy to criticize.

· It did not explain why the visor was lost 1 570 meters west of the wreck and the ship's course and speed before and after the accident [1.13].

· It did not describe or explain the sudden listing to 50° starboard and why the ship regained stability at 15° list [1.12.1].

· It did not explain how the vessel could have floated on the side with water on the car deck - a completely unstable condition, [1.12.5, 2.16 and 5.5].

· It did not explain the slow sinking of the vessel.

· It did not explain anything about the locks of the inner ramp and conditions inside the garage.

· It did not consider the statements given by the passengers, particularly the time of the accident [1.12.1].

· It did not consider any other cause of accident than the one given seven and nineteen days after the accident.

· It did not establish where the water, noticed by many survivors on deck no. 1 long before the abrupt listing, originated from, and why so many persons from deck no. 1 managed to survive.

· It did not consider all the loading possibilities of the visor leading to failure.

· It did not clarify the extraordinary performance of the forward, inner ramp, which first was partly open (or almost closed) allowing little water to enter, and which then was significantly more open to permit large amounts of water to enter the garage, so that the ship would list suddenly, and, finally, which closed itself so it took a long time for the ship to list to 90° [1.15].

On 14 April 1995 the author wrote for the first time to the Commission to protest against the quick conclusions. The Commission never replied.

After the Part-Report was issued nothing really happened apart from people resigning from the Commission [1.18]. The Commission met about 20 times. The Commission now and then (six times!) stated that the Final Report was going to be published, e.g. September 1995, beginning 1996, July 1, 1996, end of 1996, February 1997, etc. The absolute final meeting to agree the final report was March 12, 1997. The Commission met, agreed the report and went home. On October 24, 1997 Uno Laur informed (Lloyd's List) that the Final Report was to be published in early December 1997. The Final Report was published December 3, 1997 [chapter 4].

1.18 RESIGNATIONS FROM THE COMMISSION

Enn Neidre resigned from the Commission in April 1996, and was replaced by Mr. Priit Männik, a senior security police chief in Estonia. Mr. Männik had led the interviews of all Estonian crew and survivors in 1994. Mr. Männik was forced to resign in his turn November 5, 1997 and was replaced by Jaan Metsaveer, a professor and expert to the Commission.

Andi Meister resigned from the Commission in July 1996, and was replaced by Mr. Heino Jaakula, a naval architect and expert of the Commission. Mr. Meister accused the Swedish members of the Commission to have manipulated the video films taken of the wreck by divers and ROVs [1.23]. The Commission was then without chairman. During the autumn 1996 the President of Estonia appointed Uno Laur as chairman.

Börje Stenström died end February 1997. It was indicated that Dr. Michael Huss, of the Royal Institute of Technology, Stockholm, and expert to JAIC would conclude the work of Stenström.

Olof Forssberg resigned in May 1997 after having admitted that he had lied about a letter he mishandled as director general of the Swedish Accident Investigation Board (SHK). Forssberg also resigned as director general from the SHK. Forssberg and Stenström were replaced by Mrs. Ann-Louise Eksborg, new director general of the SHK, and Mr. Noord, a master mariner and expert of JAIC. It is noteworthy that Forssberg, after admitting lying, was offered a new job with the Swedish government keeping his salary and title.

Mr. Bengt Schager, [Introduction and 1.19], resigned as expert (of psychology) from the Commission in September 1997. Schager did not believe any longer in the Commission's findings according to newspapers. It was never clear what an expert of psychology was doing in the investigation. Mr. Schager was appointed an expert to the Commission directly by the Swedish government at an hourly rate of USD 250:- per hour and his total bill was about USD 700 000:- before he resigned (Swedish newspaper Expressen 971016). His input to the investigation has never been explained. It seems that he spent most of the time *'editing'* survivors' testimonies, [4.7] and (12).

1.19 MODIFIED TESTIMONIES

The Commission based its theory mainly on statements given by two surviving crew members - 3/E Treu and fire patrol man Linde. Statements from other survivors, crew and passengers, were completely ignored by the Commission. Both crew members talked to the press after the accident and described what happened aboard before, during and after the accident. These 'virgin' statements do not support the theory of the Commission.

Linde told Swedish newspaper Dagens Nyheter October 7, 1994, that he made the fire patrol and experienced a heavy impact in the garage, [1.22 and 4.7]. Later, when he was back on the bridge, there was a telephone call about water on deck no. 1, which Linde was sent down to check.

Later, in March 1995, when questioned by the Commission, Linde was telling a completely different story. Now the telephone call was about noise at the inner ramp and that Linde was ordered down to check the garage! The problem, the time and the persons on the bridge have changed. The modified statement was meant to fit the theory of the Commission. Then of course, as Linde was not telling the truth, his statement became very contradictory and unbelievable. It is strange that the Commission members doing the interview or questioning did not ask Linde about what he had told Dagens Nyheter, about telling the truth or about having been told to change his statement to fit the Commission's theory.

Treu's case is similar. After the accident he told a story, evidently to fit the Commission's theory. However, Treu and Linde had not co-ordinated their new stories to fit each other - therefore Treu and Linde contradicted each other [4.7].

The author read Dagens Nyheter early October 1994 and Linde's original story, and used it as one little support for my accident theory. When the writer approached an expert of the Commission (Schager), he was told that Linde had given a completely different story to the Commission! That Treu and Linde contradict each other is public knowledge. The interested reader may refer to other sources (10) i.e. Jörle/Hellberg, 'Katastrofkurs' ISBN 91-27-05715-1.

There is no doubt that the two crew members have changed their early statements about the accident to the media into something else later, which 'better fits' the theory of the Commission.

Addendum January 2001 - the reason for the changed statements is probably the following. When the surviving crew first came ashore they were apparently told to say on the 28 September that they had all seen the visor already missing from the ship when they abandoned it at about 01.30 hrs. However, when the wreck was located on the 30 September the visor was apparently found still hanging on starboard below the bow, where the ship had finally sunk at 01.32-01.36 hrs, a few minutes after they had left the ship. It naturally meant that the false statements would be revealed if the finding of the visor became known, so (a) the crew statements were adjusted a little and (b) the finding of the visor was kept secret [1.22] and the visor was later removed from the wreck by explosives and pulling but salvaged at the wreck! It is very likely that watch keeping AB Linde's first statement is correct i.e. that he was sent down long before 01.00 hrs to check leakage below waterline into the ship and that the sudden listing occurred at 01.02 hrs as a majority of survivors stated. Actually - Linde may have discovered the leakage in the first place earlier -and reported it - and the crew including Treu and Sillaste was working to stop it - however, Linde described it only as a sudden impact when he was on the car deck. Later Linde may have been sent down again to see how the preventive work progressed when the listing occurred).

It is strange that the members and experts of the Commission did not discover the contradictions given by these key witnesses. Of course the Commission used the altered statements to support its theory, but it may not have been aware that the statements then had been modified.

The Final Report (13) should of course report all the different statements given by Linde and Treu as reported in the press in October, 1994, to the Estonian security police (Mr. Männik [1.9]) and the final statements given by the same people to the Commission in March, 1995. In reality the Final Report (13) does not mention Linde's statement to DN.

The statements given by passengers and most other crew have apparently also been modified [4.7]. Disregarding the testimonies that do not contribute at all to finding the cause of the accident, **there are very few statements by the passengers supporting the theory of the Commission**. This should also be clear in the Final Report, if it included the complete statements given by passengers. In fact the Final Report only includes *'edited'* testimonies of the passengers [4.7].

1.20 THE FINAL REPORT

The Final Report (13) was apparently agreed in March 1997 and was supposed to be published end May, beginning June 1997. However, then Forssberg [1.18] resigned in May and the Final Report was postponed. It was rumoured that it was going to be published in December 1997.

For over three years the Commission had only mentioned one cause of accident, which was established seven dramatic days after the accident [1.4]. All work was then done only to confirm the Commission's implied proximate cause of accident. The Final Report (13) does not even mention any other possible causes.

The Commission never made public any other possible causes of the accident or that it has discussed any other cause of accident.

Experts of the Commission told me that it has discussed other theories. When the writer asked for details, he was met by silence.

It seems that most information published by the Commission does not stand detailed scrutiny and that the Commission can not admit it. The Commission adhered to its statement in the Part Report [1.17] - **all facts (sic!) remained unchanged.** This was confirmed when the Final report was published chapter 4. **Nothing was changed from what had been said already October 4, 1994**, [1.4].

1.21 STATEMENT BY KARI LEHTOLA, DECEMBER 3, 1996

Mr. Lehtola said (Lloyd's List December 4, 1996) that the Commission's final report manuscript should be ready for release by February (1997).

Mr. Lehtola also said:

> *'It is very possible the structure of the bow visor was not as good as it should have been. We have carried out a lot of calculations, and we have more still to do. I cannot really comment more - the results are not yet in and it is too early to draw final conclusions'.*

Thus two months before the manuscript should be ready for release, *'we (the Commission) have still more (calculations) to do', ... 'the results are not yet in ... too early to draw final conclusions'.* This was said 20 months after the Part-Report was published in April 1995 [1.17] and 24 months after the strength analysis was ordered to be done by the Royal Institute of Technology at Stockholm [1.16]. Ten months after Lehtola made his statement no Final Report had been published.

The statement of Lehtola was quite revealing. The reason the report was stopped in 1996 was that the German group of Experts presented its findings to the Commission in August 1996. The Germans showed that the maintenance and the condition of the visor were bad. The Commission had evidently not checked the maintenance and condition of the visor and did not know what to do - more work was necessary. But no more work was done - no new technical reports about the visor were handed in and filed with the Commission after the pathetic statement of Lehtola (the record of reports, etc. was public - the reports themselves were secret). In the end JAIC gave up and decided to publish its Final Report (13), where the visor was in perfect condition but incorrectly designed before the accident [4.6].

Note August 2000 - actually the Commission met frequently between March-December 1997 modifying and changing the Final Report (13) written by an unknown ghost writer, which explains the many contradictions in the Final Report. No manuscript of the Final report dated March 1997 exists.

1.22 TWO VERSIONS ABOUT WHO WERE ON THE BRIDGE?

The Commission had not identified the three bodies on the bridge of the wreck 1.14(i). Linde had given two statements about who were on the bridge [4.7].

The first version is as follows:- In Dagens Nyheter October 7, 1994, in the interview of Linde by an Estonian speaking Swedish reporter, it is said that fire patrol man Linde was at **00.30 hrs** in the garage when he experienced that the vessel suffered a heavy impact, so that Linde fell to the deck. Linde contacted the bridge by talkie-walkie and reported the incident and was told to check the forward ramp and to continue the fire patrol round.

Linde found nothing wrong at the ramp, he continued his patrol round and returned to the bridge at **00.40 hrs**, where he reported to 2/0 Peeter Kannussaar and saw 3/0 Andres Tammes and the Master (Arvo Andresson).

Linde also noted that the vessel's speed was 15 knots. At about **00.45 hrs** there was a telephone call to the bridge taken by 2/0 Kannussaar. It was about the presence of water on deck no. 1 (not the car deck no. 2 deck). Kannussaar told Linde to go down and check deck no. 1. Linde descended the forward stairway and reached deck no. 4 level, where the stairway is reduced in width down to deck no. 1. There Linde met many passengers from deck no. 1 saying that there was water on deck no. 1. Linde could not go down against the flow of passengers. Linde contacted the bridge by way of talkie-walkie and reported this. The abrupt listing 50° to

starboard and back to upright and to equilibrium at 15° starboard list occurred soon thereafter. Linde then reached deck no. 7 and assisted passengers into life rafts.

According to MÖ [2.12] the abrupt listing took place at **01.02 hrs**.

In a second statement to the Commission Linde stated another version to the effect that he was in the garage much later (10). He experienced the heavy impact, reported it by talkie-walki to the bridge (2/0 Kannussaar) and was told to check the forward ramp for five minutes. Linde did not notice anything suspicious. He then returned to the bridge where he met 2/0 Tormi Ainsalu and 4/0 Kaimar Kikas. (The reason for this was that the watch had been changed at **01.00 hrs**. Note also that 'Estonia' had two second officers (2/0), Kannussaar and Ainsalu).

Linde stated clearly to the Commission that 2/0 Kannussaar and 3/0 Tammes had left the bridge and he did not mention the presence of the Master. The time was thus after **01.00 hrs**.

According to the second statement Linde was then on the bridge a few minutes, when there was a telephone call taken by 2/0 Ainsalu. The call was about strange noises at the inner ramp and Linde was ordered to go down to the car deck and check. He descended the stairway and reached deck no. 5 level and asked the reception to open the fire doors to the garage. Then there was the abrupt list 20° to starboard. And then the passengers started to escape from deck no. 1 saying there was water on deck no. 1. Linde followed the passengers to deck no. 7 and, there he reported by talkie-walkie to the bridge (2/0 Ainsalu), that there was water on deck no. 1.

After Linde left the bridge to attend the emergency in the garage, the Commission suggested that the Master visited the bridge at **01.07 hrs** (Lloyd's List March 17, 1997). The Master is quoted to have said *'we are one hour late'* and then he left. How the Commission knows this is not known to the writer. All persons on the bridge at that time, whoever they were, are dead, and according to many passengers, the vessel was already listing since **01.02 hrs**.

3/E Treu has told the Commission that he overheard the last conversation between Linde on deck no. 7 and 2/0 Ainsalu on his talkie-walkie/portable VHF unit in the engine control room. Treu states that Linde told Ainsalu that 'there was water in the garage', not on deck no. 1 as Linde stated. Treu has also told the Commission that he (Treu) saw water entering the garage at the forward ramp at **01.15 hrs**. Treu is the star witness of the Commission. It is his statement the Commission refers to in [1.11.1]. The abrupt listing should then have taken place after 01.15 hrs. 3/E Treu has also stated to the Commission that, after the abrupt listing had occurred, he talked to 4/0 Kaimar Kikas on the bridge about the possibility to shift ballast in order to reduce the listing caused by free water in the garage (sic!). This conversation took place between 01.20 and 01.25 hrs. There are two possibilities:

1. The abrupt listing took place at 01.02 hrs and it is likely that 2/0 Peeter Kannussaar, 3/0 Andres Tammes and the Master Andresson were on the bridge at that time, as Linde had left them there a few minutes earlier. However 3/0 Tammes' body has been found in the Baltic.

2. The abrupt listing took place after 01.15 hrs and 2/0 Tormi Ainasalu and 4/0 Kaimar Kikas were on the bridge as Linde has told the Commission in his second statement and which is confirmed by 3/0 Treu who had (a) heard Linde (on deck no. 7) talk to Ainsalu (on the bridge) via talkie-walkie/VHF and (b) had talked to Kikas on the bridge on the phone later. The question may be answered by *'Who sent the Mayday at 01.22 hrs?'*

At **01.22 hrs** there was a first Mayday by VHF (Channel 16) from 'Estonia' received by M/S Mariella. The Commission states that the desperate caller is 2/0 Tormi Ainsalu. The total communication is 2 minutes and 9 seconds long with many interruptions and of no real value (10).

Then the first caller is replaced by 3/0 Andres Tammes at **01.24 hrs**. The communication is now clear and orderly [1.11.8]. Tammes gives the position of 'Estonia'. The voice of Andres Tammes has been identified by both Treu and Linde and others on the recording of the transmission, where in the background also the voice of 1/0 Juhan Herma has been identified, when it calls out the position. At 01.30,06 hrs the transmission was broken (10).

It is therefore quite clear that 3/0 Tammes and 1/0 Herma were on the bridge. (The body of Tammes was later found in the Baltic. He thus managed to get out of the bridge).

There are three bodies on the bridge. The Commission assumes they are 1/0 Herma, 2/0 Ainsalu and 4/0 Kikas to support its (and Treu's) cause of accident. It is also possible that they belong to 1/0 Herma, 2/0 Kannussaar and the Master Andresson, and then the Commission's cause of accident is not valid and 3/E Treu is caught lying.

The Commission's diving survey never checked the identities of the bodies.

Note August 2000 - it is now easy to establish that the first version is nearer to the truth than the second version about the times, but that probably both versions do not reflect what actually happened aboard the 'Estonia' during the accident. The writer thinks today that both Linde and Treu lied about what they experienced and that crew members on the bridge survived ... and disappeared.

1.23 THE VIDEO FILMS

The various underwater surveys were recorded on video and it is likely that the above question could have been resolved by checking the video films. During 1996 some Estonian members of the Commission accused that the videos had been edited or tampered with by the Swedish members. The matter was dropped after Meister and Neidre had resigned from the Commission.

1.24 CONCLUSIONS OF CHAPTER 1

Considering above you should conclude:

1. The Commission decided the cause of accident only nineteen days after the accident [1.10].

2. The three key witnesses stating, that they saw water entering the garage, have given contradictory testimonies later. One has retracted his statement, [1.12 and 4.23].

3. The time of the accident stated by one key witness - 01.15 hrs - is neither confirmed nor certain [1.12].

4. The visor was reportedly lost 1 570 meters west of the wreck. The ship's course and speed before/after losing the visor have never been explained [1.13].

5. The diving survey was incomplete [1.14].

6. The inner ramp was never open [1.15]. It was closed! It may have been damaged a little after the accident, [2.19 and 2.21].

7. The strength analysis of the visor outfit was done after the cause of accident was announced and was incomplete/not finalized [1.21].

8. There is no proof that the visor separated, when the ship was underway to Söderarm/Stockholm [1.8].

9. There is no proof that water entered the garage at the forward ramp, [1.9 and 1.12.1].

10. With water on the car deck the vessel should have tipped and floated upside down, which she did not [5.5].

11. No other causes of accident have been investigated [1.20].

12. The Commission has ignored completely the passengers' statements.

13. The video films of the survey of the ship have been tampered with [1.23].

Taking above thirteen points together you reach the surprising conclusion that it is certain that the garage was completely dry, when the abrupt listing occurred (at 01.02 hrs). **This is not what the Commission wants the public to believe and you should wonder what actually happened.**

Immediately after the accident there were reports in the press [1.12.5] that 'Estonia' had changed course before the accident. At the same time Linde and others told the press that there was water on deck no. 1 below the car deck, before the sudden listing occurred. Then the press published corrections about the course change - it was not confirmed - and **the Commission published its statement, that water on the car deck caused the accident.** Water on deck no. 1 was forgotten. But at that time the Commission had no solid proof at all that there had been water on the car deck. The Final Report (13) does not produce any proof at all that there was water on the car deck, except a statement by 3/E Treu that water came in at 01.15 hrs.

The writer finds it quite extraordinary that nobody within the Commission including the experts and observers has ever questioned the hastily conclusion that there was water on the car deck. Linde never saw any water on the car deck. The systems engineer 1.9 never saw any water on the car deck. He said that the 3/E told him that he saw water on the car deck [4.23]. All stability theory says that there could not have been any water on the car deck, [2.16 and 5.5]. **A ship does not sink with water on the car deck**. So what could have happened? Chapter 2 is my suggestion what happened.

CHAPTER 2. WHAT HAPPENED ABOARD THE 'ESTONIA'

2.1 A SEQUENCE OF EVENTS BASED ON PASSENGER STATEMENTS

To establish what happened aboard the 'Estonia' on the night of the accident you must evidently first study the early statements given by all the survivors - passengers and crew.

The Sequence of Events and the times in [2.2] are generally based on the German Group of Experts sequence published early September 1996 and partly included in (11). It is based on an analysis of the early statements given by 123 of 137 survivors. The sequence here also considers the virgin statement given by the fire patrol watchman Linde given to Dagens Nyheter 7 October, 1994 [1.22]. Evidently the statements of some engine crew members are ignored as they are contradictory.

The German sequence suggests that the visor fell off after the first abrupt listing took place, which the writer thought already 1994. The Germans suggest that water leakage into the garage caused the abrupt listing. The writer does not believe that 1 000 000 litres of water leaked into the garage undetected.

The German sequence was presented to the Commission in September 1996 and you would have expected some sort of reaction from it. However it was filed away and apparently not further discussed. In June and December (11) 1997 the Germans presented witnesses stating that 'Estonia' was leaking below waterline. This is also reported in (12).

Several survivors have generally confirmed the times and events considered in [2.2]. These events are shown in **bold**. Other events are inferred by, e.g. the assumed angle of list and/or the assumed (changed) course of the vessel. These events are shown in ***bold/italic***. Events, related second-hand and/or by only one survivor, mainly about assumed visor failure or what was heard but was not seen, are not included. The events are, e.g. that someone heard someone stating that the visor had fallen off, etc. **There is also a distinct possibility that someone has spread misleading statements and information. The** confirmed events suggest that nobody saw and heard that the visor fell off and pulled out the inner ramp and that water flooded the garage. Therefore the confirmed events are interpreted differently in the last column of the Sequence of Events. There is no proof whatsoever that the visor fell off before the abrupt listing occurred. It is unlikely that there was any water in the garage, when the abrupt listing occurred.

The question is therefore - where did the water come from, which was observed on deck no. 1 at 00.56 hrs? The interpretation here suggests that inflow of water below the waterline - a leak - caused the abrupt listing. The NOTEs indicate that the Commission has completely overlooked this possibility.

The reason nobody saw or heard the visor being ripped off is that this event took place at 01.12 hrs when the vessel was listing 34° and when it was full panic aboard. This book gives the reason why the visor fell off [2.8].

The speeds, positions and courses of the ship during these events are plotted in figure [2.23]. The Commission has tried to plot its sequence of events, [4.20 and 4.21].

Note January 2001 - since writing the above in 1997 the author has been in contact with several survivors confirming the sudden listing at about 01.02 hrs. Records made public by the Commission also show that the expert to *'edit'* the survivors' testimonies, Mr. Bengt Schager, was also convinced that the time of listing was at 01.02-01.05. However, in order to produce the false sequence of events it was necessary to change the time of the *'accident'* to 01.15 hrs so that Linde's statements could be ignored. It is also clear that the visor was still attached to the ship when it sank.

2.2 SEQUENCE OF EVENTS ON SEPTEMBER 28, 1994

No.	Time	Event	Personal interpretations and notes
1	some-time 00.30-45	**Speed 15 knots. Course 287° between Tallinn and Stockholm, i.e. West coast of Estonia and Söderarm, Sweden.** Wind SW force 7. Permanent list 1° to starboard. Weather was not particularly bad. Several passengers and crew noted a heavy impact/noise.	Shell was damaged below water line, one or more spaces on deck no. 0 started flooding. It was not noticed. Inflow rate may have been abt. 1.6 m^3/s. A statement by Linde that the garage was dry at this time and that the inner ramp was tight is true. **NOTE:- The Commission has not checked deck no. 0 for any shell damages.**
2	00.50-55	Several passengers noted that **vessel behaved differently** - slower rolling [2.16].	Water on deck no. 0 reduced the intact G_0M (abt. 2.1 m) and increased the roll period.
3	00.54-56	Several passengers noted **water on deck no. 1** starboard side and started to evacuate deck no. 1***. One escaping passenger may have informed the information desk on deck no. 5, which in turn informed the bridge, which ordered the matter to be investigated.***	Compartment(s) on deck no. 0 were full of water and spilled out on deck no. 1. The crew did not understand this. ***The 1st statement by Linde* [1.22], *that he was asked to investigate water on deck no. 1, is true.***
4	00.58-59	Several passengers noted or were awaken by **two or three heavy noises**. Some passengers started to escape from their cabins already at this time. **The water tight doors on deck no. 1 were open.** Some passengers believed the permanent starboard list had increased.	Water broke an internal division on deck no. 0. Water could now flow to several compartments of the ship on decks nos. 0 and 1 - intact G0M was rapidly reduced to zero. NOTE:- **The Commission has not checked, if the watertight doors were closed** [1.14(xii)].
5	01.02	**Suddenly vessel first listed quickly 50° to starboard** and then up righted and came back to equilibrium at about 15° list - then the list increased at a rate of 1.5°/minute. **Several survivors noted all this. Passengers and crew tried to evacuate inside spaces but had great difficulty to walk on the sloping decks in corridors and to cross stairwell flats to reach the stairs.** But **passengers from deck no. 1 were already inside the stairwells** at deck no. 4 level and **informed others that there was water on deck 1**.	***Panic aboard!*** Free water in the ship had reduced the G0M to < 0 and it caused the abrupt list. Then the vessel found a new equilibrium at 15° starboard list [3.16]. Continued inflow of water below, and later above, waterline slowly increased the list until vessel was on the side. At 15° list it was extremely difficult to walk on a deck that prevented passengers to escape. NOTE**:- The Commission cannot dismiss this theory as the investigation of the wreck is incomplete** [1.14].
6	01.03	The officers on the bridge acted so that ***the vessel turned to port***, but they did not reduce the speed.	The objective was to get the vessel into the wind and waves as quick as possible to counter the list.
7	01.04	***The officers on the bridge probably started to try to ballast the ship upright as they thought the list was caused by wind and shifting cargo. 3/E Treu has***	Some passengers have mentioned that the list was reduced when they escaped. Maybe this was a result of the officers' effort to ballast the ship upright? Anyway, the effort failed as

		said that ballasting attempts took place much later (01.20-01.25). Otherwise there was confusion on the bridge.	more water flowed into the ship! But ***the extra ballast in the double bottom contributed to the ship not tipping upside down later.***
8	01.09	***Water started to flood deck no. 4 starboard side - the windows on deck no. 4 starboard side started to break as they came below water.*** Port propeller and rudder were above waterline. ***Port engines shut down automatically.***	***Angle of list was now abt. 30° and it was impossible for 99% of the persons still inside the cabins to get out.*** All survivors had reached deck no. 7 at this time or were inside stairwells getting up to deck no. 7.
9	01.12	***The starboard main engines shut down as the lub.oil pump sucked air.*** Water started to flood deck no. 5 starboard side as windows on deck no. 5 starboard side were below water. The visor was torn off, when it hit sideways down into the water surface. The visor fell off abt. one mile north of the position given at 01.24 [2.8]. Some water may have entered into the garage at the forward ramp at this time as the inner ramp opened a little at the top. Vessel could not steer anymore. ***Vessel was 1.5 mile off course heading South.***	Angle of list was now abt. 34°. More than 3 000 tons of water had filled the vessel but ***the garage was still dry.*** The side of the visor was almost flat in the waterline - the speed was abt. 10/12 knots, the course was abt. 225° straight into the waves. The visor was subject to a transient impact force (not a normal periodic hydrodynamic wave force!) perpendicular to the inclined side. The impact force was 6-10 times bigger than any hydrodynamic design load in the upright position and sufficient to rip off the visor sideways in one go [2.15].
10	01.21	***Deck no. 7 starboard side was below water.*** Vessel had slowed down to 7.5 knots.	Angle of list was now abt. 50°. ***Probably >100 people had already drowned in the outside cabins/spaces on starboard side.***
11	01.22-24	**Mayday was sent.** Position was given. **Ship's speed was very slow. Ship stopped.**	Angle of list was now abt. 53°. Starboard side of bridge must have been close to the water.
12	01.30	**Vessel drifted on the side to Northeast. End of Mayday.**	Engine room was dry (three engine crew left this space 01.20-01.30 according to (10)).
13	01.35	**Clock stopped on bridge.** Persons on deck no. 7 port side launched life rafts and left the vessel. Survivors were walking on the side.	Angle of list was probably >70° = you can walk on the port outside. ***Garage started to flood from deck no. 1 level. 6 m bow trim?***
14	01.36	**Vessel sank *with bow first.*** Some survivors state that vessel sank with the bow first. (**Note June 2000** by writer - naturally the ship sank with the stern first and the bow was high above the sea, i.e. the spaces aft below the car deck must have been full of water).	The Commission states [1.11.5] that the ship sank with the stern first. It is more probable that the vessel sank with the bow first as forward spaces on deck nos. 0 and 1 were flooded (and the engine room was dry) [2.21].

2.3 THE CAUSE OF THE LOSS OF STABILITY

The cause of the loss of stability is a shell damage i.w.o. compartments, e.g. frs 85-97 and/or 97-110 (the sauna) on deck no. 0 below waterline followed by inflow of sea water. The damage probably took place at 00.40 hrs. It is regretted that these normally un-attended spaces of the wreck have not been searched by divers to check/identify any shell and consequential interior damage and to see whether the water tight doors were

closed on decks nos. 0 and 1 [4.8]. It is very easy for a diver to go down and check the sauna as an access hole is already made in the port side at deck no. 1! [4.14].

2.4 HOW TO PREVENT THE ACCIDENT

It is not uncommon that ships start to leak below waterline. Water inflow into un-attended compartments below waterline can only be detected by remote bilge alarms. SOLAS does not require such safety features either on passenger/roro-passenger ships or cargo ships. Remote bilge alarms can be connected to automatically start bilge pumps and to close water tight doors, when water is detected inside the ship. Had the crew/bridge/ECR been alerted about water inflow at 00.45 hrs, the accident could have been prevented. Formal safety assessments have not considered anything of this [5.10].

2.5 COULD MORE PASSENGERS HAVE SURVIVED?

It should be clear that the abrupt listing followed by continuous slow increase in the angle of loll made it impossible for most passengers in the cabins to escape as early as 3-5 minutes after the abrupt listing. The only way to survive was to act on your own immediately. Mainly those lucky passengers in cabins, who had been forewarned by water, noise and the modified behaviour of the ship and were awake and managed to reach the stairwells within minutes, seem to have survived together with other persons from the public rooms. The ship's crew could have done nothing to assist passengers inside cabins to be rescued. Probably passengers started to drown as early as 01.12 hrs in the starboard outside cabins on deck no. 4.

2.6 COULD THE CREW HAVE SAVED THE SHIP?

It should be clear that the officers and crew were in a hopeless situation. The junior officers on the bridge observed the abrupt listing at 01.02 hrs and probably changed course to counter it, which was good. Then they hung on to the control consoles (the list was considerable) and probably called the Master and other senior officers for assistance over the phone. But probably they never made contact - the Master and other senior officers had difficulties to reach their phones and to get out of their cabins. This explains why no Mayday was sent earlier. The bridge officers no doubt forgot or were not able to close the water tight doors, which should have been done immediately, so the vessel might have survived. This is the only fault the writer can find. But already at 01.09 hrs water flowed into deck no. 4 above the garage and then no water tight doors could have stopped the vessel sinking. The writer does not know what emergency procedures were used on Estonia but evidently the procedures did not foresee an abrupt list of first 50° and then back to 15°. The writer believes that the junior officers tried to ballast the ship upright 01.04-01.15 hrs, which was good, while 3/E Treu states that this took place much later (10).

Note August 2000 - the writer does not longer believe that the engine crew tried to ballast the ship upright. The writer believes that the engine crew left the ECR immediately after the first sudden listing to save their own lives. In fact it would have been impossible for the engine crew to evacuate the Engine Control Room on deck 1 at 01.25 hours, when the list was >45°, and to reach deck 8 a few minutes later.

2.7 THE MASTER'S AND SENIOR OFFICERS' ACTIONS

The 1/O apparently made it to the bridge later and managed to send a Mayday at 01.24 hrs. It is not known if the Master reached or was on the bridge. We do not know at all who were on the bridge [1.22]. The Master could have done very little - after 01.09 hrs no action could have been taken to save more lives or the ship.

2.8 THE BOW VISOR SEPARATION

It is not possible that the visor fell off before the abrupt list at 01.02 hrs and the writer do not believe that it and the inner ramp were leaking before that time or contributed to the accident. It is hard to believe in a conspiracy (11) whereby the crew noticed that the inner ramp was leaking as early as 00.45 hrs and tried to do something about it with or without the knowledge of Master, 1/O or the bridge/ECR and without reducing speed/changing course etc. In consequence it is concluded here that the garage was dry at least until 01.12 hrs, when the visor separated from the hull and in the process maybe pushed open the inner ramp a little [2.21]. It is regretted that for two years the Estonian, Finnish, Swedish Commission on the one hand and the Group of German Experts on the other hand quarrelled about whether (a) the visor locks were damaged first by external wave forces or (b) the visor hinges were damaged first by the weight of water inside the leaking visor, so that, in either case, the visor could fall off, pull open the inner ramp and open the ship to the waves so the garage could be flooded (and then that the inner ramp closed itself!). The Germans changed opinion September, 1996 and state now (11) that the visor/inner ramp only leaked, so that the vessel listed, and that the visor fell off later when the ship listed. [2.19] why this is unlikely!

The position of the visor is at 289° to Söderarm - the ship's arrival point. The visor location seems far too South from a reasonable course from Tallinn to Söderarm. For the positions of (i) the visor at time X, (ii) the ship at the 01.24 hrs Mayday and (iii) the wreck at 01.55 hrs to make sense, the visor must have fallen off after the abrupt listing took place at 01.02 hrs and after the vessel turned to port at 01.03 hrs and before the Mayday at 01.24 hrs. A reasonable time X appears to be at 01.12 hrs, when the vessel had 34° list to starboard, 3 000 tons of water had already flowed into the vessel below waterline, the vessel was heading straight into the waves, 225°, and the side of the visor was in line with and almost parallel with the water surface. When the 'Estonia' then pitched into the waves, the visor hit the water surface and the sideways impactive/slamming force was 6-10 times greater than any periodic hydrodynamic wave force acting on the visor in the upright condition. This happened about the same time the engines stopped - the vessel then continued one mile south where it stopped in the water. When the impactive force slammed straight into the side of the visor at angle of list 34°, all locks, hinges and other connections were broken in one go after which the visor then crashed down on the forepeak deck and rested against the ramp at the top recess. This may have been heard by the trainee second officer (see FR6.2.1 in (13)). At the next pitching the visor was lifted over the protruding ramp and may have touched the inner ramp [1.9] and tipped forward and was rammed by the bulbous bow. It is of course also possible that the inner ramp was damaged later [2.21].

Judging only from photographic evidence of damage to visor locks, hinges and hydraulic pistons it seems perfectly possible that these parts were ripped apart and bent by one sideways impact from starboard to port as outlined above [4.10].

Note January 2001 - the writer believes today that the visor was in fact found adjacent to the wreck and was **not** detached as outlined above. The above description assumed that the visor position 1 560 meters West of the wreck was correct, an assumption which today cannot be considered correct. **The visor was naturally removed from the wreck under water ... after the accident.**

2.9 THE SAFETY RULES IN FORCE ON THE 'ESTONIA'

The garage of the 'Estonia' was arranged as per SOLAS II-1, reg. 23-2; (1) (open/close shell door indication), (2) (TV surveillance and/or leak detection) and (3) (manual patrol) to ensure that no sea water could leak into the garage that could lead to major flooding [5.2]. The Commission has spent a lot of effort to prove (1) that the door indication was defective, (2) that the TV surveillance was faulty and (3) that the manual patrol was unreliable i.e. that all three safety features to detect water in the garage were not functioning on the 'Estonia' on the night of the accident. The patrol watch man (Linde) has stated from the first day after the accident (in different versions) that the garage was dry at all times (particularly when he left the garage the last time at abt. 00.35 hrs (or 00.50 hrs - i.e. abt. 27 or 12 minutes prior to the abrupt listing took place) and this seems to be true.

There is no convincing evidence that the garage safety arrangements on the 'Estonia' did not fulfil the spirit of SOLAS.

Even if it were the case, it does not mean that water entered the garage and caused the abrupt list, 50°, at 01.02 hrs. The writer am quite astonished that many Administrations have concluded that the SOLAS rules did and do not contribute to the safety of the ships and that the only solution is that Estonia type ferries shall have adequate stability with 0.5 meter of water on the garage deck through design solutions only, while the inadequate safety rules are maintained. Adding new safety rules on top of other existing safety rules, if the latter are not working, are not a good safety practice. It is to be hoped that some new safety rules, agreed after the Estonia accident, should therefore be revised in due course - the rule about adequate stability with 0.5 meter of water in the garage deck through design solutions only would not have prevented the Estonia accident [5.16]!

2.10 THE VISOR LOCKS

The Commission has concluded that the strength of the locking devices is the main cause of the accident, [1.15 and 1.21]. However; the Commission never recovered the visor side locks during the diving survey [1.14] and the Commission ensured that the side locks were never examined in a laboratory [1.16]. Furthermore [2.15] the Commission wrote to the German Experts in December 1996 and stated that the Commission could not prove that the faulty locks originated from the shipyard. The Commission's strategy was clear - blame everything on the visor locks, even if they were never salvaged from the wreck and never analyzed in a laboratory, but ensure that the shipyard cannot be blamed for it, as the shipyard will require better proof than what the Commission has provided. Nothing of this was mentioned in the Final Report (13).

Note August 2000 - the German Experts wrote several letters to the JAIC in 1995/6 pointing out errors in the Commissions conclusions all of which were made secret by the JAIC. The German letters were not available to the public until March 1998 after the publishing of this book. It would appear that the visor did not fit correctly and that at least the bottom lock must have been damaged and unusable prior to the accident, that the visor and ramp were secured with ropes and that the visor and ramp could not have caused the accident.

2.11 THE POSITION OF THE VISOR

Considering the position of the visor vis-à-vis the wreck the only possibility, that the accident took place as suggested by the Commission, is that, if the visor fell off underway (at 01.16 hrs, course 287/9°) and the garage filled with water, the vessel then started to turn 180° to port (at 01.17/8 hrs with increasing angle of starboard list, port rudder and propeller above water and stopped engines a few minutes after 01.18 hrs!) and returned on counter-course 107/9° to one mile south of the original course where Mayday was sent 01.22/4 hrs. This

manoeuvre is impossible. Forssberg has a different story [1.13]. Another story was published in the Final Report, [4.20 and 4.21].

2.12 ABOUT WATER FLOWING DOWN FROM THE GARAGE TO DECK NO. 1

The Commission suggests that water first flooded the garage deck no. 2 in the superstructure, and then that water leaked down to deck no. 1 in the hull to alert passengers. First the water in the garage must have leaked through closed fire doors at the centreline with 20 cms high sills on deck no. 2 into the stairwell. You need about 600 tons of water in the garage to reach the top of the sills (20 cms of water in the garage), when the ship is upright or has 1° list to starboard (the ship listed originally 1° to starboard). The free water in the garage would tend to collect on starboard side and to increase the heel, so that the fire doors would be left in a dry position. It is alleged that the vessel's stabilizers managed to counter the heeling moment and keep the vessel upright. Therefore water flowed through a very narrow slit below the fire doors in the garage and flowed down the stairwell to no. 1 deck, out in the corridors and into the cabins on starboard side of deck no. 1, where it was finally observed (at 00.56 hrs). Then it seems logical to assume that the visor had fallen off at abt. 00.45 (and not at 01.12 or at 01.15 hrs). This is impossible, as the ship would then have been abt. 4 miles to the west of the visor position, when the abrupt list occurred (at 01.02 hrs). **The whole idea that water flowed down from the *superstructure* to deck no. 1 is distorted. The Commission refers to statements by passengers that water was seen pouring in all around and between a fire door and its frame in the stairwell. The writer has never managed to identify these survivors nor the statements. The statements do not make sense unless the door was located on deck no. 1 leading to a space to/from deck no. 0 but not at deck no. 2.** The idea that water poured down to deck no. 1 from deck no. 2 is as unlikely as the allegation that great amount of water entered the garage in the first place at the forward ramp [1.7].

It is unforgivable that the Commission has not considered where the water on deck no. 1 originated from.

A survivor (CÖ - Cabin 1049 [1.2]) says he was sitting in his bed at about 01.00 hrs smoking a cigarette when he heard strange noises. He dressed quickly (30 seconds) and went out of the cabin. He saw water in the alleyway and when looking ahead from the staircase he saw the water tight doors open. He saw in the alleyway water splashing up as if a valve had been opened somewhere below. The abrupt list occurred when he was further up on his way to the 7th deck. For some reason the Commission ignores this statement.

Another survivor (MÖ) is quite certain that the abrupt list occurred at 01.02 hrs.

Many survivors from all six watertight compartments with cabins on deck no. 1 forward have stated that there was water on that deck before 01.00 hrs. It seems water was noticed in the absolute foremost compartment and in a compartment 50 meters aft at about the same time. How could water have spread so fast so far apart? The Commission decided to ignore the question or to state that the water came from the garage above via one closed fire door. It is very strange, if someone as early as 00.56 hrs noted that water was pouring down the stairwells between decks nos. 2 and 1 that this extraordinary fact was not brought to the attention of the crew. On the other hand water in corridors and in cabins on deck no. 1 starboard side alone may not have been considered too dramatic.

Some passengers on deck no. 1 left their cabins early, as they knew that something was very seriously wrong and moved up to deck no. 5 to complain about water on deck no. 1 - not about water pouring down from deck no. 2 in the stairwell to deck no. 1. Some passengers from deck no. 1 went to the open deck no. 7 before the abrupt listing occurred. An unproportionate number of survivors (33% - 46 of 137) had cabins on deck no. 1 (even if it seems that half of them were not in their cabins when the accident occurred). **It is absolutely impossible that the water on deck no. 1 leaked from the garage above.**

2.13 ABOUT SAILING WITHOUT VISOR

The Commission's cause of accident [1.11.3, 4] means that the vessel would have sailed without visor for two minutes in the upright condition without anybody noticing it from the bridge. This is confirmed in the Final Report, [4.20 and 4.21]. Even if you could not see the visor itself from the bridge, you should be able to see the light inside the garage illuminating the sea in front of the ship in the middle of the night. Nobody saw anything to this effect. The Commission has never commented upon this fact.

Note August 2000 - without visor and a fully open ramp >1 800 m^3/min of water would have entered the ship's garage and she would have turned turtle immediately. The light went out at least 10 minutes after the sudden listing (no capsize), i.e. the light in the garage would have illuminated the outside sea.

2.14 ABOUT BREAKING AND BREACHING OF THE VISOR OUTFIT

It also means that events like locks and hinges breaking, deck plating being ripped apart, visor flipping up and down, etc. [1.11.1,2,3] must have taken place when no other unusual events were observed aboard long before 00.45 hrs (even if JAIC in (13) says it took place at 01.00 - 01.10 or 01.15 hrs). These events must have been associated with big noises but nobody heard anything (except the visor pounding against the fore peak deck?) It can only be regretted that the Commission made the wrong conclusion when it found the wreck without visor [1.4] and thought that the loss of the visor caused the accident, while it was more probable that the accident had caused the loss of the visor. To repeat the idea for three years or to back it up with doubtful testimonies and publish it in the Final report is irresponsible.

2.15 ABOUT IMPACT LOADS ON THE BOW ABOVE WATERLINE

In 1971 the writer worked for Lloyd's Register of Shipping and was asked to investigate a number of damages to bow structure above waterline on tankers and bulk carriers - plastic deformation of plates and stiffeners. It was found that transient and random impact forces on structure above waterline, similar to slamming forces on the bottom of the ship, were to blame. These impact forces increased in number and amplitude when the angle between the bow shell and waterline (flare angle) was reduced and when the shell plate was flatter (less rounded). The impact load could be ten times bigger than a periodic and hydrodynamic external wave load (but of much shorter duration). When 'Estonia' listed >34° to starboard the effective flair angle was almost 0° and therefore big impactive loads would develop, when that side hit the water surface. The Commission has never considered that the visor was struck off sideways in such way.

Instead the Commission has alleged that the visor locks were of poor design and manufacture to transmit external wave loads into the hull proper in the upright condition. The locks were said to be so poor so you wonder, why they had never before been deformed or fractured by less severe wave loading. Poor design, etc. manifests itself onboard by deformation, fractures and malfunction (before total collapse takes place). The suggested poor design never manifested itself prior to the accident. The Commission has said i.a., that the reason for this is that the ship never in 15 years encountered such heavy weather as the night of September 27, 1994 (13), but this is of course not true.

Interestingly, one Commission member wrote to the German Experts in December 1996 and stated that the Commission could not prove that the faulty locks originated from the shipyard.

2.16 STABILITY ASSUMPTIONS

The ship was not fully loaded on September 27, 1994. Assume that there were 500 tons fuel aboard, a couple of hundred tons of fresh water, 1 000 tons of cargo (cars, lorries, trailers) and 100 ton passengers and luggage and port trim tank full, 185 tons, to balance heavy cargo on starboard side. Then the deadweight (dwt) is about 2 200 tons and the draft (d) is about 5.1-5.2 meter. Deck no. 1 below car deck is then below the waterline.

With its large beam (B) the 'Estonia' had always good, built in stability. The writer estimates the metacentric height GoM to be about 2.1 meter, which is confirmed by other people [4.4]. (GoM is a measure of the 'lever' which together with the ship's displacement keeps the vessel upright). The 'Estonia' required approximately minimum GoM about 1.8 meters to fulfil the rule requirements of damage stability. The writer has estimated the lightship weight of the 'Estonia's to about 9 000 ton. The 'Estonia' was a 'two compartment' ship i.e. two watertight compartments in the hull below the garage could be flooded without the vessel capsizing or sinking [5.5].

If water leaks into the car deck of the *superstructure* (figure 2.16.1), the vessel heels about 10° with 600 000 litres on the deck. Fig. 2.16.1B. This water does not flow down to deck no. 1 inside the *hull*, as the door openings are at the centreline and fitted with 20 cms high sills. The water is always trapped on the side of the sloping deck.

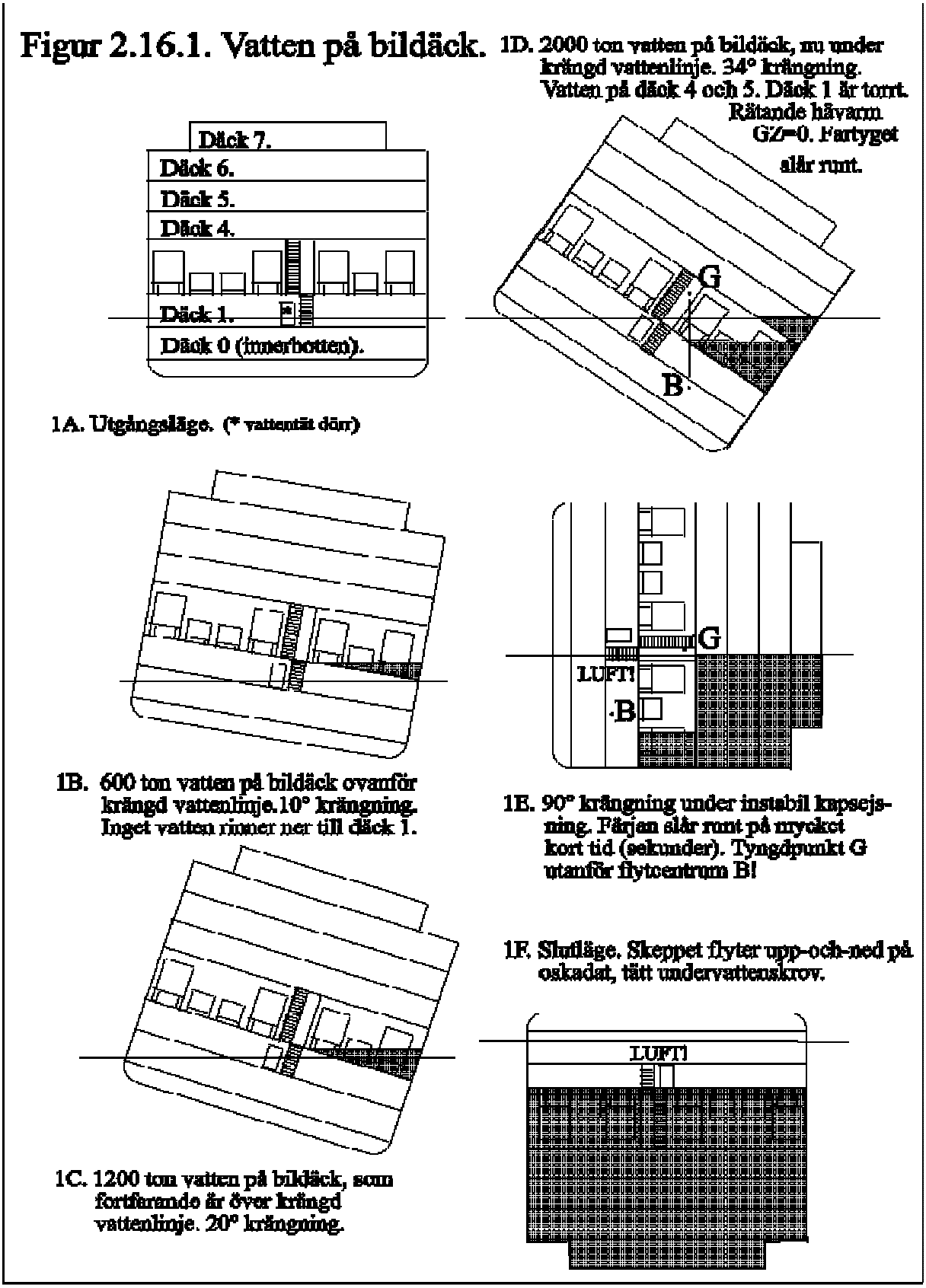

(**Translation of Swedish text in figure 2.16.1 above** - Water on car deck. 1A. Initial position. 1B. 600 tons of water on the car deck above the heeled waterline. No water flows down to deck 1. 1C. 1 200 tons of water on the car deck, which is still above the heeled waterline. 20° list. 1D. 2 000 tons of water on the car deck, now below the heeled waterline. 34° list. Water on decks 4 and 5. Righting lever GZ=0. The ship turns upside down. 1E. 90° list at instable capsize. The ship turns upside down in seconds. Centre of gravity G outside centre of buoyancy B! 1F. Final condition. Ship floats upside down on the undamaged, tight hull).

You need about 1 200 tons of water on the car deck 7.62 meter above the keel to list the vessel about 20° to starboard. This water, 1 200 tons, forms a 2.8 meter high wedge with its base against the starboard side and with a lever about 7.22 meter from centreline, which lists the ship (a fair number of trucks and trailers were parked on the starboard side - water filled the space below and beside the trucks and the centre of gravity of the water wedge was pushed inboard). Fig. 2.16.1C. The top of the wedge is many meters from the ship's centreline and almost a meter below the sills of the fire doors, when the ship lists. Some water flows out from the car deck via the existing scuppers. The more water that enters the car deck, the more the 'Estonia' lists, and at a certain angle of heel with a certain amount of water on the car deck she tips upside down [5.5]. The reason for this is that the righting arm, GZ, becomes 0 at abt. 34° heel, fig. 2.16.1D, and the vessel then is unstable. The vessel cannot float with list 90°, fig 2.16.1E, which is an unstable position. Then the vessel is on its way of turning turtle with the whole superstructure flooded, fig. 2.16.1F. When the 'Estonia's was turning upside down, she should have floated on the hull with the centreline (and the openings down to deck 1) three, four meters above the waterline, fig. 2.16.1E. Very little water could during that time flow down to spaces below the garage.

The volume of the *hull* below the car deck is abt. 18 000 m^3, and that air cannot leak out, when the ship is upside down. As the lightship was only 9 000 tons and the dead-weight 2 200 tons, there was plenty of buoyancy left inside the ship *hull* (abt. 7 000 tons), so that the 'Estonia' should in the end have floated upside down, if she had capsized with water in the *superstructure* - fig. 2.16.1F. But she did not do that. She sank!

It does not matter if there are errors in the weight assumptions, i.e. if the ship and the cargo, etc. were lighter or heavier, or if the stability was better or worse or the levers were longer or shorter, because the principal result is always the same. You need substantial amounts of water on the car deck in the superstructure to heel the ship 18°, and you need about 2 000 tons of water on the car deck to heel the ship about 34°, where it turns turtle in minutes and floats upside down [5.5].

Water in the superstructure does not only heel the vessel. The water also trims the vessel either on the bow or on the stern. The water always collects at the lowest point on the car deck, which shifts position, when the ship heels and trims. With 1 200 tons of water in the garage the ship trims about one meter either on the stern (1 200 tons water aft - the opening in the bow moves up several meters above the waterline and makes further water entry more difficult - or on the bow (1 200 tons forward) - which means that the car deck is almost below the waterline forward and facilitates water entry. In the latter case you would expect that the 'Estonia' had turned turtle in a few minutes - as 'Herald of Free Enterprise' outside Zeebrügge 1987 (but 'Herald of Free Enterprise' only ended up on the side as the water depth was 12-14 meters, where she capsized, i.e. she never sank below the water surface but rested on the bottom with the side above water [4.16].

It took about 33 minutes for the 'Estonia' to list to 70° after she had first suddenly listed to 15° (witnessed by several survivors). It means that about one hundred tons of water per minute should have leaked into the superstructure above the waterline during 30 minutes. It seems quite strange. We know, if the inner ramp was completely open and if the ship trimmed on the bow and if there was speed forward, that the vessel would have turned turtle in a few minutes, alternatively if the water ended up in the stern, that the bow opening would have been about 2-3 meters above the waterline and no or little water could get in. **My conclusion is that there was no water in the superstructure.**

If a watertight compartment in the hull below deck no. 1 below the car deck of 'Estonia' is flooded (figure 2.16.2) with abt. 1 000 tons of water the stability, the metacentric height GoM, is reduced by 0.8 meter due to free water surfaces (loss of inertia to prevent the vessel to list). If two compartments are flooded (fig. 2.16.2B) the metacentric height is reduced 1.6 meters and there remains only 0.5 meter of GoM. It means that the ship is still stable, but that she rolls slower. This is the rule requirement. Ships shall survive with two flooded compartments of the hull.

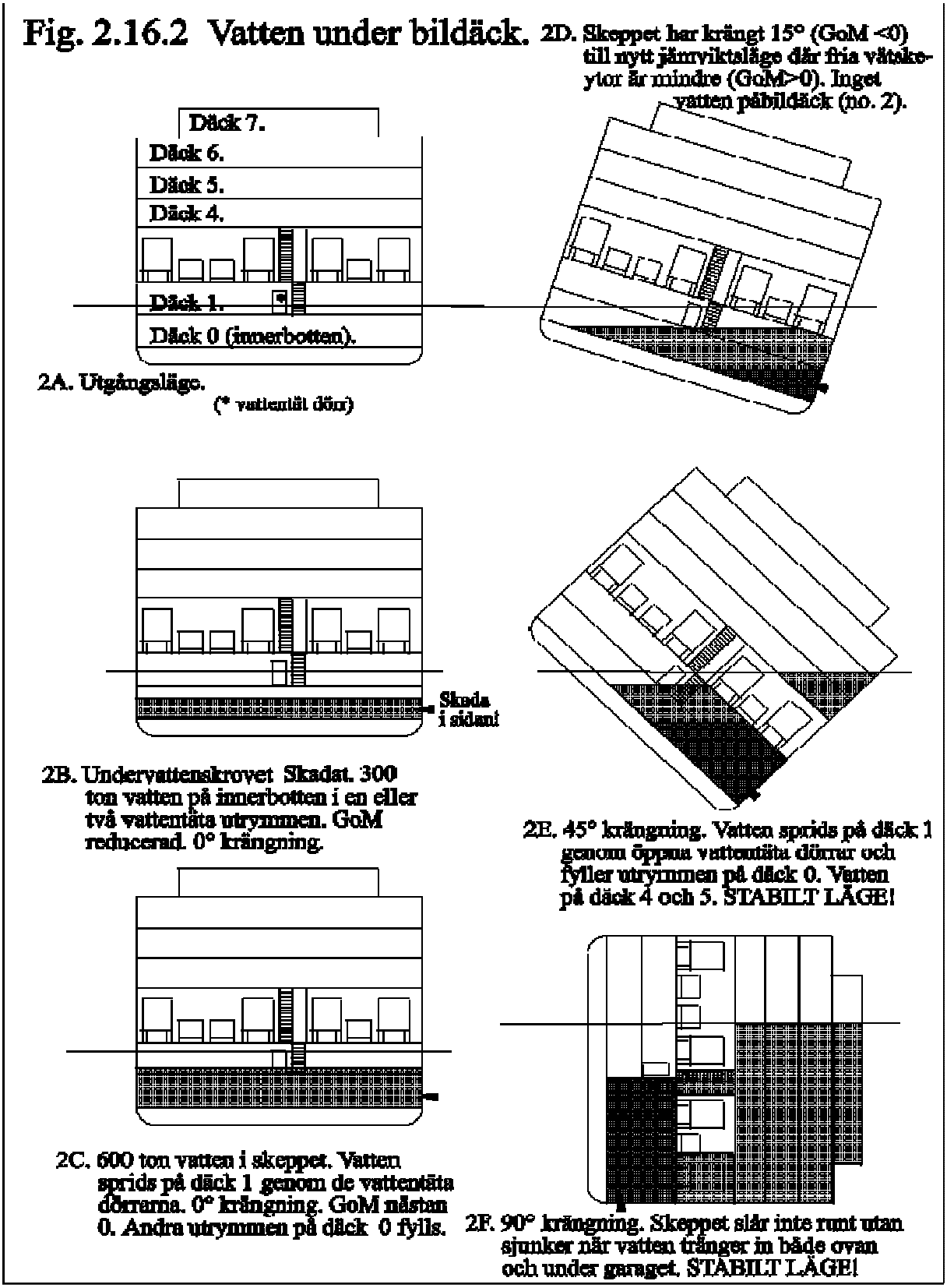

(Translation of Swedish text in figure 2.16.2 above - Water below car deck. 2A. Initial position. 2B. Underwater hull damaged. 300 tons of water in one or two compartments. GoM reduced. 0° heel. 2C. 600 tons of water in the ship. Water spreads through open watertight doors. GoM almost 0. Other compartments on deck 0 flooded. 2D. Ship has heeled (GoM<0) 15° to a new equilibrium (GoM>0), where free water surface effects are smaller. No water on the car deck. 2E. 45° list. Water spreads through open watertight doors and fills compartments on deck 0. Water on deck 4 and 5. Stable condition! 2F. 90° list. The ship does not capsize, when water enters both below and above the car deck. STABLE CONDITION!).

If three compartments are flooded (>2 200 tons) the initial stability becomes negative and the ship may suddenly list 50°. But because it is only 2 200 tons of water in the *hull*, it becomes stable again, when it has listed a certain angle - fig. 2.16.2D, because the free water surfaces are reduced by the heeling, when the water is pushed up against the watertight car deck. Open watertight doors are temporarily 'on the dry' and no water spreads. Also the righting lever (GZ) is positive at larger angles of heel.

That three or more spaces could be flooded on the 'Estonia' during the night of the accident is clear. The watertight doors between all six watertight compartments on deck no. 1 forward of the engine room were open. The following probably happened. First (at abt. 00.40 hrs) one or two compartments (the sauna (11)) on deck 0 were flooded due to a shell damage, and the vessel was still stable - fig. 2.16.2B. When the water reached deck no. 1 (at abt. 00.50 hrs) it spilled out there (fig. 2.16.2C), which was observed by many passengers on deck no. 1, who complained at the reception, which in turn informed the bridge (00.54 hrs) by telephone. SL was sent to check! While a large number of passengers on deck no. 1 started to evacuate their cabins and climb to deck no. 7, the water spread through open watertight doors on deck no. 1, and filled other spaces of the *hull* on and below deck no. 1. The result was that the initial stability (GoM) became zero and that the ship listed to starboard at 01.02 hrs (fig. 2.16.2D). Then the ship became temporarily stable, when the water could not spread through the watertight doors and the free surfaces were reduced. But water continued to flow in - fig. 2.16.2E, water could again spread through the open watertight doors and the deck house was flooded, so that the ship heeled more and more - 70° at 01.35 hrs - and sank 01.55 hrs.

That the ship finally sank (01.55 hrs) and did not, e.g. tip over upside down, was due to the fact that there was a hole in the hull below waterline - fig. 2.16.2F - and plenty of water (weight) in the *hull* below the car deck, which stabilized the ship. All air in the ship below the car deck and forward of the engine room escaped through the ventilation system, while the angle of heel was less than 90° and the buoyancy was reduced to <12 000 tons. The engine room was still dry, but its buoyancy was maybe only 5 000 tons, so 'Estonia' could not float on that. Thus she sank, probably with the bow first.

Note August 2000 - correction - evidently the 'Estonia' sank stern first - already at 01.36 hrs.

2.17 ELEMENTARY STABILITY

Both the Commission and the German group of experts think that 'Estonia' capsized and sank due to large amounts of water on the car deck in the *superstructure*. The Germans (11) are probably right when they suggest, that the visor locks and hinges were worn and badly maintained, but it did not contribute to the accident, as the visor according to the Germans, was struck off after the abrupt listing had developed. The Germans suggest that thousands of tons (millions of litres!!??) of water leaked through the badly maintained rubber seals between the visor and the hull and the inner ramp and the hull. The writer does not believe that so much water can leak undetected, while the visor and ramp were still in place, and he does not believe in the Commission's theory.

A ship sinks when the *hull* is damaged below waterline. Therefore all ships have watertight bulkheads to prevent that water spreads, if the *hull* is damaged. 'Estonia' should have survived with one watertight bulkhead damaged and two compartments flooded. But because the watertight doors were open in the bulkheads, the water spread and 'Estonia' first listed and then sank. This is elementary stability theory. That the Commission has omitted to investigate normal leakage is remarkable. There is not one word in the Final Report (13) that 'Estonia' could have sprung a leak!

2.18 WHAT CAUSED THE LEAKING?

The ship suffered a big impact some time about 00.40 hrs and later there was water on deck no. 1 at 00.50 hrs. Water probably leaked into the vessel below deck no. 1. The writer has no idea of the proximate cause of the leak (Note August 2000 - but see below). Linde said the vessel suffered a hard impact. A small explosion inside a tank or pipe? Explosions are relatively common causes of accidents aboard. The NTSB investigating the TWA Flight 800 accident still does not know what caused that accident, but an explosion is a possible cause. NTSB investigates many different causes. The Commission never bothered to check 'Estonia' for any other damage than the visor, [1.22.10 and 4.8].

2.19 WATER IN THE GARAGE?

The inner ramp was found only partly open [1.11.3]. 3/E Treu said he saw water flowing in at the forward ramp at 01.15 hrs on the garage VDU in the engine control room [1.9.1]. Treu did not say that he saw the inner ramp completely open, i.e. that he could see the waves and sea through the completely open bow opening [4.23]. Assume that the ramp was only partly open, 60-70 cms at the top or 30-35 cms halfway down about 2.5 meters above the garage deck (as it was found). The area of the two wedge shaped openings (P+S) is about 0.82 m², where water can enter (up to 2.5 meter above the garage deck). The garage deck was about 2 meters above the waterline. Assume that the pitching period was about 12 seconds and the relative motion amplitude was about 4.5 meters. This means that the two wedges were below water for about 3 seconds every 12th second - the remaining time the wedges were out of the water! How much water flows in through the wedges in 3 seconds? The loose visor was protecting the openings, so water only flowed in by gravity. Say the inflow velocity was 3 m/s. Then only 7-8 m^3 flowed in every 12 second (even if Treu said that water was flowing in all the time!) or 36-37 m^3 per minute! Therefore it would have taken at least 15 minutes to fill up the *superstructure* (600 tons) until water reached the sills of the fire doors. But water would also flow out through the scuppers of the garage drenching system. Enough water to capsize the vessel did not flow through the partly open (or leaking as suggested by the Germans) inner ramp.

No, we have to assume that the visor pulled open completely the ramp just after 01.15 hrs, say at 01.16 hrs as suggested by the Commission in [1.15.5]. It is strange that Treu has never stated that he saw the inner ramp completely open and that Treu never reported his first observation to the bridge. Soon after the whole garage was full of water according to Treu (10) and the ship was listing. Between 01.20-01.25 hrs Treu is in contact with 4/O Kikas on the bridge discussing ballasting the vessel to reduce the listing (sic!). They were not discussing stopping the engines or changing course. With the bow completely open the area through which water enters is, say 15 m², and the velocity is 7 m/s (ship's speed), i.e. 1 575 m^3 enter in one minute! (five intakes of 3 seconds) or 3 150 m^3 in two minutes. Then the vessel will heel >34° in less than two minutes and capsize, i.e. tip upside down (like the 'Herald of Free Enterprise' [4.16]. But the 'Estonia' stopped heeling at 20°! So apparently there was much less water in the garage - 1 200 tons - and then the water stopped flowing in. The inner ramp closed up again! The Commission says so [1.15.5].

Treu's statement that 'the *whole garage was full of water'* (above the roofs of the cars) is also strange! If there was 2 000 tons of water in the garage, the vessel should have listed at least 34°, but then all the water would have collected on starboard side aft and only the outermost cars aft would be fully below water, and the ship should have tipped upside down. All the cars on the whole port side and the starboard side forward would be dry [4.21].

The writer believes 3/E Treu never saw any water in the garage. The writer believes that 3/E Treu was as surprised as the Master Andresson, 2/O Kannussaar and 3/O Tammes on the bridge and Mr. Linde, when the

vessel abruptly listed 50° at 01.02 hrs. Maybe Treu was asked to make up his story by someone who did not know how ships behave with water in a superstructure above waterline?

2.20 WATER ON DECK NO. 1!

Many survivors saw water on deck no. 1 in the hull before 01.00 hrs and that the watertight doors were open. Deck no. 1 forward consists of six compartments of cabins without toilets. The compartments are divided by watertight bulkheads about 10 meters apart fitted with watertight doors. The public toilets are located in the 2nd and 5th compartment, i.e. 75% of the passengers on deck no. 1 must pass a watertight door to go to the toilet. It is probable that the watertight doors were permanently open at sea in contradiction to SOLAS II-1, reg. 15.7.1.2.3. and reg. 15.9.2. 5.6, but maybe in compliance with reg. 15.9.3. It is possible that sea water leaked into the vessel hull on deck no. 0 below waterline between, e.g. frames 85-98 and/or 98-110 well before 01.00 hrs. Maybe the doors in the watertight bulkheads on deck no. 0 were open, so that more than one compartment was flooded. Later the water started to spill out on deck no. 1 and was noted by many passengers. The water spread through open watertight doors at the centre line into six compartments. The damaged vessel then trimmed on the bow, so the water flowed generally forward. Suddenly the vessel lost its stability due to the free water on deck no. 1 and the associated loss of inertia. All water on deck no. 1 then collected on the starboard side, some water flowed also up from deck no. 0 port side and ended up on the starboard side on deck no. 1 (this is when water ended up in JS' cabin in the foremost compartment on deck no. 1 [4.7] and listed the vessel 50°, but as the amount of water was limited and the free surfaces were reduced at increasing angle of loll, the vessel regained stability at 15° list. Water did not spread through the open watertight doors at centreline, which were on 'the dry'. When more water continued to flow into the ship 70° list developed during 30 minutes. Then the vessel slowly sank.

Note August 2000 - the writer now believes that the starboard stabilizer fin foundation may have been damaged, due to bad installation welding in February 1994, and due to wave forces, at about 00.40 hrs and a 0.2 m² opening was created. It seems the night of the accident was the first time the stabilizers were tested since installation! Then the whole compartment inside the fin unit was flooded with water - inflow rate about 50 ton/min. Only one or two compartments were thus flooded - the stabilizer compartment and the small, narrow compartment forward - because the watertight doors at the end bulkheads were then closed. After the water had filled the compartments, it started to spill out on deck no. 1 above, where it was noticed by several passengers. The time was then about 00.55 hrs. The bilge pumps were started. However, then for unknown reasons somebody opened the watertight doors on deck no. 0 level (the tank top) and the water spread into more compartments aft - the generators and main engines rooms - and the water disappeared from deck no. 1! The result was loss of intact stability due to free water on the tank top (deck no. 0) in three, four compartments and the ship heeled suddenly 30° to starboard (with help of outside waves rolling the ship) at 01.02 hrs. Then the ship stabilized itself at about 15° heel.

The visor was probably not properly locked at departure - the bottom Atlantic lock was probably already damaged and out of function [Appendix] so the visor was pulled off when the ship sank at about 01.35-01.40 hrs. The ramp was never pulled open by the visor. It too was probably not properly locked upon departure.

The cause of the accident was thus a combination of a badly fitted stabilizer fin February 1994 and the crew mishandling the situation - opening the watertight doors. For unknown reasons the Commission would not admit this. When it saw on the videos of the wreck that the visor was missing (the visor must have been just beside the bow), it decided to blame the accident on the visor and the ramp.

Note September 2001 - it could also have been the swimming pool recessed into the double bottom that collapsed and caused the leakage. Who has ever heard of a swimming pool inside the double bottom of a passenger ship? The 'Estonia' had one. How and when it was built is unknown, but it was a substantial weakness of the grounding protection of the ship.

2.21 THE INNER RAMP DAMAGE

The Commission says that the ramp opened up, permitted water to flood the car deck of the superstructure and closed [1.15.5]. The German Group of Experts pointed out during 1997 that this was unlikely, as the ramp

was not weather tight in the lower port corner (11). To make the ramp tight, the crew put cloth and rags between the ramp and the frame, which are seen on the video films. Had the ramp been opened up, the cloth and rags should have been flushed away. They are still there - thus the ramp was never opened up. Of course, had the ramp opened up and water had entered the car deck, 'Estonia' would have tipped upside down. She didn't = the ramp never opened. The JAIC believes the rags were flushed in between the ramp and the frame, when the ship sank and when the ramp closed (13).

2.22 SAFETY IN THE FUTURE

All rules and regulations about safety at sea are based on previous accidents and examinations of such accidents. You cannot develop safety rules unless you investigate properly all accidents. The complete failure of the Commission to investigate the 'Estonia' accident [chapter 4] has contributed to reduced safety at sea [chapter 5].

2.23 PLOT OF ACCIDENT

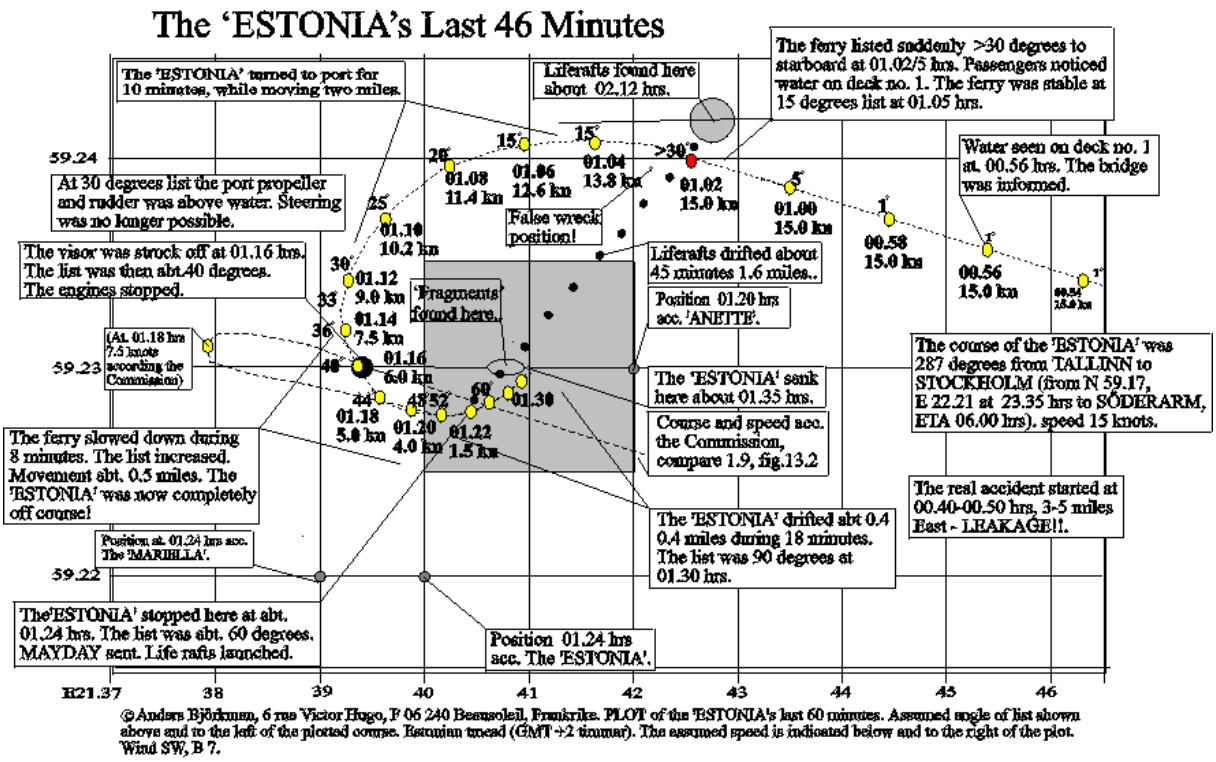

See elsewhere on the Heiwa Estonia web page for an updated sinking scenario.

CHAPTER 3 TECHNICAL DESCRIPTIONS OF VISOR, RAMP AND DAMAGES

3.1 VISOR DESIGN

The visor of the 'Estonia' was of very simple and basic recognized design. See figure 3.1. The visor consisted only of steel plates and stiffeners supported by three tiers of horizontal girders and the upper deck and a bottom horizontal support girder and some vertical web frames. The total weight was about 55 tons.

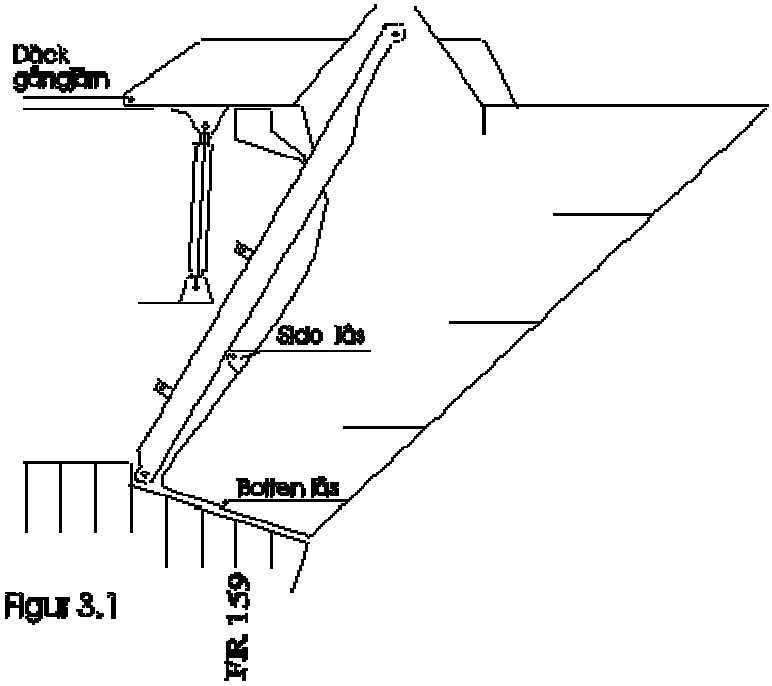

Figur 3.1

The visor was held in place against the hull by three locks - two side (sido) locks and one bottom (botten) - Atlantic - lock. The function of the locks was generally to transfer the vertical wave/buoyancy load on the visor to the hull. Without the three locks the visor would otherwise flip up around the deck hinges by the vertical wave/buoyancy load. The locks were of basic design. Each lock consisted of a lug on the visor, which fitted between two bushes of a locking pin assembly on the hull. The two bushes of the locking pin assembly were held in place by lugs or hull plates. A pin held by the bushes would lock the visor lug. The pins were hydraulic operated. When the pins were engaged, they activated limit switches, which in turn activated the green light on the control panel to the effect that the locking pins had been pushed into the locks and the visor was locked. Evidently the locks could not transmit sideways loads.

The visor was therefore also held in place against sideways and longitudinal motion/forces by locating cones (horns) on the hull which fitted into suitable pockets in the sides and at the bottom of the visor. Longitudinal loads on the visor would of course also be transmitted to the hull by the rubber seals and other vertical contact points between visor and hull.

3.2 EXTERNAL LOADS ACTING ON THE VISOR

External loads act on the visor at sea, when the visor is submerged into the waves, when the ship pitches and heaves. The principal vertical load is buoyancy, when the visor is submerged by the ship's motion. The vertical buoyancy load is mainly a function of the volume of the visor (about 165 m^3) and to a less extent the velocity of submerging the visor. Another vertical load, which may act on the visor, is an impact (slamming) load of transient nature. It depends a lot on the speed and course of the ship and the shape of the visor and the angle between visor and waterline.

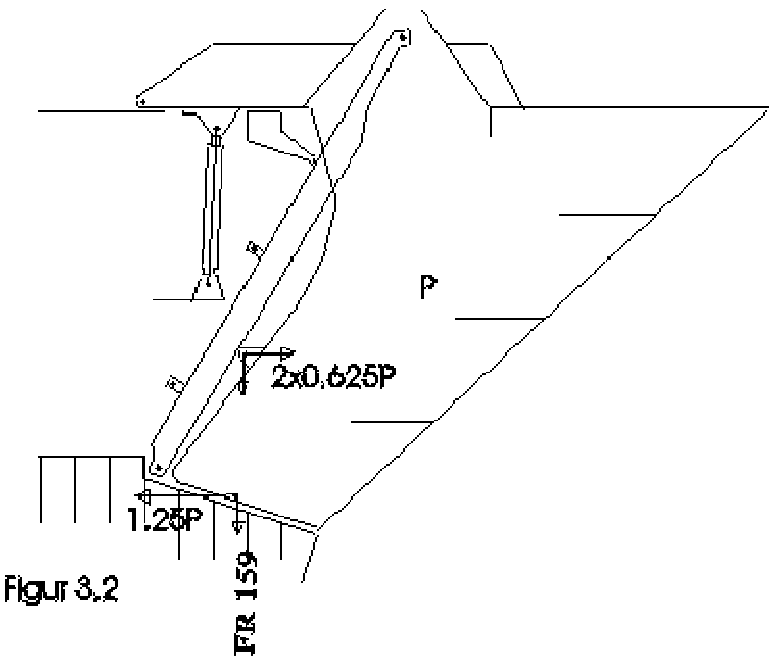

Figur 3.2

The vertical load P on the visor can only be transmitted to the hull via the three locks. As the vertical buoyancy load is applied on the visor about 2.5 meters forward of the locks and the vertical distance between the side and Atlantic locks is about 2.0 meters, it is simple to show that a vertical upward load P (generally buoyancy minus visor weight) tons on the visor is transferred to the hull as a compressive horizontal force 0.625P via each of the two the side locks and as a tensile horizontal force 1.25P via the Atlantic lock. See figure 3.2

A vertical load pushing up the visor will always push the side lock visor lugs towards the hull and will always try to pull away the Atlantic lock visor lug from the hull.

Therefore the side visor lugs were always in compression and the Atlantic visor lug was always in tension in service at sea.

Depending on the clearances of the three locks and the clearance of the deck hinges some of the vertical load acting on the visor may be transmitted to the hull via the deck hinges. Then the load on the locks is reduced. However, for all practical purposes the only function of the deck hinges was to enable to open/close the visor.

3.3 THE FUNCTION OF THE VISOR

The function of the visor is very simple. The hydraulic locking pins are pulled out by remote control and the visor can be pushed up and be opened by two hydraulic pistons acting on the visor lifting arms connected to the deck hinges. See figure 3.3 below. To push up the visor you need initially a total force of the hydraulic pistons of abt. 293 tons (147 tons per piston). The force acting on each deck hinge is then about 119 tons, even if the hinge was designed to easily handle 200 tons. As the visor is lifted up, the required lifting force is reduced (as the bending moment in the lifting arm is reduced) and thus also the force on the hinge is reduced. Thus - the maximum force acting on each deck hinge - 119 tons - is applied, when the opening starts or the closing ends.

Closing the visor is evidently the reverse operation. Just before the visor comes to rest on its supports, the maximum force on the deck hinge is again experienced. The load on the hinge becomes zero, when the visor rests on its supports. When the three visor locks are thereafter engaged, the visor should in principle have been pushed against the rubber seals around the visor and there should have been no clearances in the three locks, while there should have been a little clearance at and in the hinges. The vertical (upwards) load on the visor would then be transmitted to the hull only via the locks at sea.

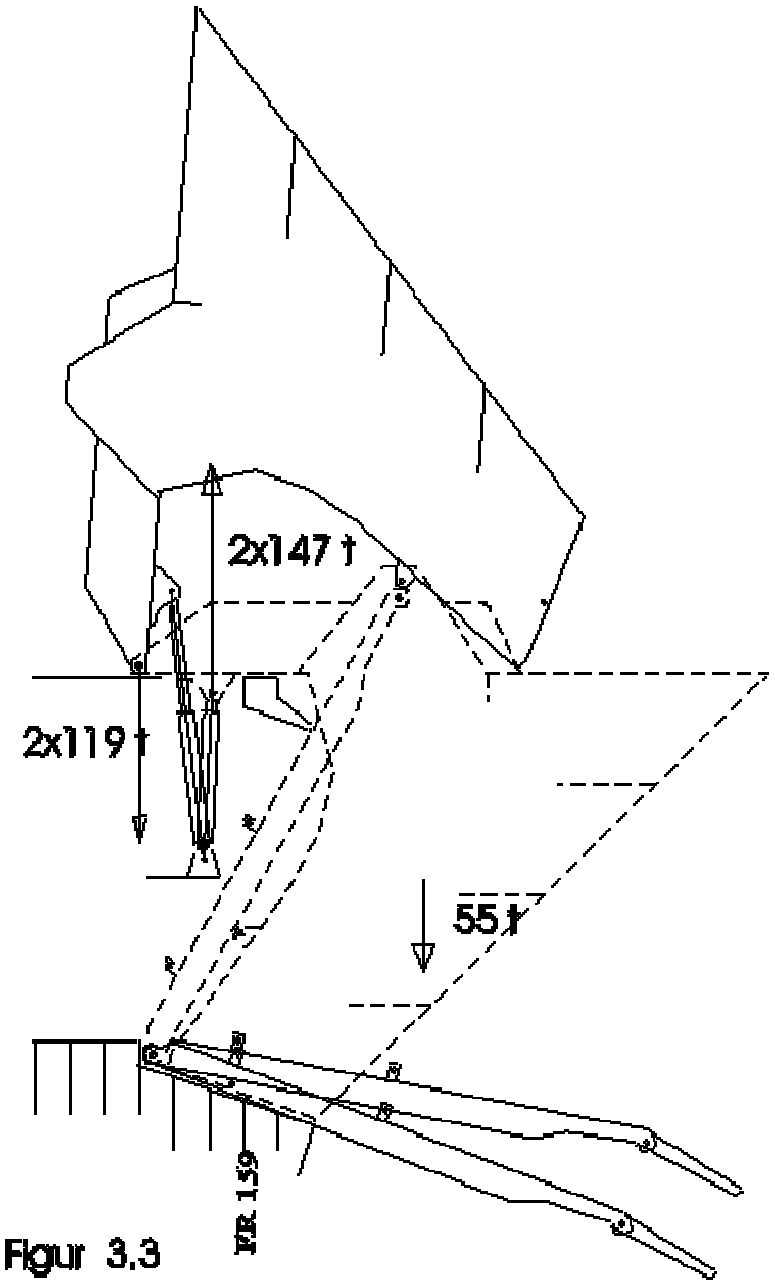

Figur 3.3

3.4 THE BOW RAMP

The bow ramp inside the visor was also of simple basic recognized design. It consisted of a strong plated frame grid with four hinges at the lower end. The scantlings of the ramp were decided by the tire pressure of the trailers rolling over the ramp. The ramp also acted as the inner, weather tight door protected by the visor leading to the enclosed superstructure of the car deck (the garage) and should be able to withstand a certain water pressure.

The ramp was, like the visor, hydraulic operated. When closing the ramp, it was lifted up by two hydraulic pistons. Then two hooks were moving out of openings in the port and starboard front bulkheads and engaged mating lugs at the two sides of the upper part of the ramp and pulled the ramp against the rubber seals around the ramp opening. Then two locking pins each side moved out of the side, one after the other, into mating

pockets at the ramp side. In fully extended positions the pins activated limit switches connected in series and when all four pins were engaged the green indicator light on the control panel on the car deck was activated.

3.5 THE CONTROL PANEL

The panel for visor and ramp operation and control was located at port side inside the ramp on the car deck. During closing operations you evidently had to close the ramp first as outlined above and then you had to close and lock the visor.

3.6 THE VISOR IN SERVICE

The normal vertical load acting on the visor is, as described in [3.2], a function of the visor volume and weight. You would expect the maximum load to be about 165 tons of buoyancy minus 55 tons of weight, i.e. 110 tons to which you could add, say 30%, to account for dynamic effects and the fact that the visor might be submerged below its upper part. The total vertical upwards load on the visor would then be P = 143 tons when the ship puts the bow into a wave up to the top of the focsle. This load should then be transmitted to the hull via the three locks - 1.25P = 179 tons (horizontally) via the Atlantic lock (tension in the visor lug) and 0.265P = 90 tons via each side lock (compression in the visor lugs). No load should have been transmitted via the deck hinges (as there should have been a positive clearance between the visor hinge bush and pin). See figure 3.2.

Model tests carried out by the JAIC generally confirm the magnitude of the vertical load acting on the visor. However, transient (shorter life = milliseconds) loads of higher magnitude - slamming - were also recorded. The slamming load was always perpendicular to the visor side and its sideways and longitudinal components were of course transmitted to the hull via the horns/pockets and the vertical contact points. The vertical component of the slamming load was naturally transmitted to the hull only via the locks.

Note August 2000 - read the analysis of the JAIC model test report at http://heiwaco.tripod.com/app2.htm

3.7 THE JAIC DAMAGE ALLEGATIONS - THE ATLANTIC LOCK

The JAIC alleges that high amplitude, transient impact load (360 tons [4.12]) on the visor first ripped apart the Atlantic lock at about 01.00. There is no proof for this. Nobody heard (a) the impact itself or (b) that the visor locks were ripped apart. The energy of the impact should have been noticed as a shock wave aboard the ship (unless this was event 1 in [2.2] - 20 minutes earlier).

The Atlantic lock was damaged as follows:-

The two longitudinal hull lugs supporting the port pin bushing had been torn apart in the 8 and 2 o'clock positions. The port bush had been torn away from the remains of the lugs and was missing. The longitudinal hull lug supporting the starboard pin bush had likewise been torn apart. It should be noted that the starboard bush was also connected by welding to the hull by a transverse bracket and that the bush had been torn away from the transverse bracket.

The locking pin was found connected to the hydraulic piston rod, which was in the pushed out position, and which had been bent upwards and sideways to port.

The visor lug was bent to starboard (see figure 8.10 in the Final Report (13) and [4.10] or fig. 10.5 from the Part Report below) and its connection to the lower support girder was damaged:-

the support girder web and face plate were buckled on starboard side and were fractured on port side.

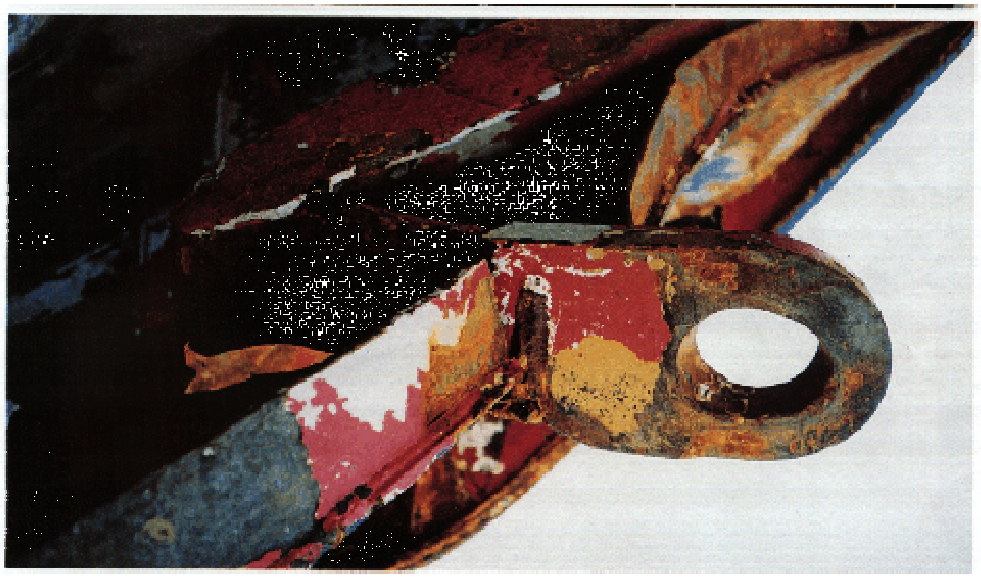

FIG 10.5
Visiable ora fOr
bottenlaset

JAIC has never commented upon the visor lug damages. If, as alleged by JAIC, the visor was damaged by an excessive vertical slamming load, it would have pulled out the lug from the lock without bending the lug (and without buckling and fracturing the lug support girder web and face plates) [Appendix].

3.8 THE JAIC DAMAGE ALLEGATIONS - THE SIDE LOCKS

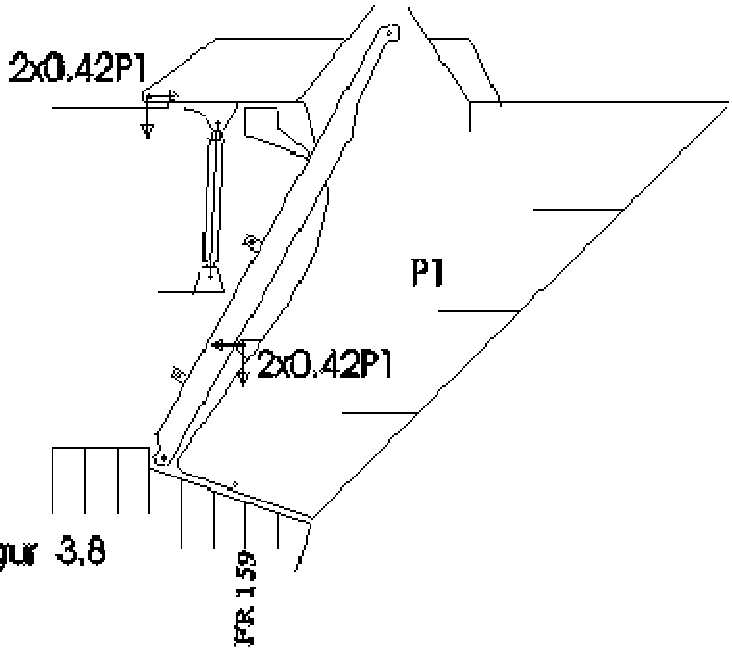

Figur 3.8

Immediately after the Atlantic lock fails as alleged by JAIC, the load transmission between visor and hull changes. A vertical load on the visor should now only be transmitted via the side locks and via the deck hinges.

It is simple to show that a vertical load P1 on the visor is transmitted as 0.42*P1 horizontally at each lock and hinge. The load is generally tension in the side visor lugs and compression in the visor hinge arms. See figure 3.8. Actually, you can see that the Atlantic lock was not required in the first place as the visor is held in place by two side locks and the deck hinges. This was the way bow visors were built in the beginning (1960's) - two side locks and two deck hinges. The Atlantic lock was added later to un-load and to reduce wear and tear of the deck hinges.

As the JAIC claims (see paragraph FR15.3 of Final Report (13)) that the accident was caused by a too weak designed bottom lock, it is easy to counter this statement by suggesting that the bottom lock was in fact not required at all to keep the visor in place. The function of the Atlantic lock was to un-load the very strong hinges and to make the visor connection to the hull stronger. Even if the load was reduced in the side lock after the Atlantic lock failed, its direction in the side locks was reversed, and JAIC alleges that the visor side lugs now were ripped off the visor support plates.

We know that the side visor lugs were ripped away from the visor support plates. JAIC alleges that the lugs were ripped off, when the visor was pushed upwards by another impact load at about 01.01 hrs (the German Group of Experts for a long time alleged that the side visor lugs were ripped away when the visor was tipping forward, still connected to the Atlantic lock).

Regardless, it should be clear that the Atlantic lock could not have been damaged by the same wave (load) as the side locks. First the Atlantic locks must fail by one very large impact, after which the load transmission pattern is modified, and then the side locks must fail by another very large impact. If one big impact was followed by another big impact, then of course all three lock could have been ripped apart within 10-12 seconds, but it could also be a longer time between the big waves. Nobody heard the second impact against the ship and that the side locks were ripped apart.

3.9 THE JAIC DAMAGE ALLEGATIONS - THE DECK HINGES

After the alleged side locks failure, the visor was only held in place by the deck hinges. However, the visor lifting arms were connected to the hydraulic lifting pistons and it is now assumed that the pistons restrained the motion of the visor. If the visor had not been restrained by the hydraulic pistons, a vertical wave load with enough energy exceeding the visor potential energy would of course had swung the visor around the hinge points, and the visor would have ended up upside down on the focsle deck in front of the deck house! This did not happen.

The JAIC alleges that the visor was now flipping up and down around the hinge points, when big vertical wave loads acted on the visor, and that there were heavy noises. The JAIC writes (on page 175 in (13)) that:

> *'it is beyond doubt that the sounds were caused by the visor moving and pounding on the forepeak deck'.*

The JAIC says that:

> *'witnesses from several areas on board heard a repeated metallic noise from the bow area during a period of about ten minutes, starting after one o'clock'.*

Say that this pounding took place at 01.02-01.12 hrs. According to [2.2] the 'Estonia' was already sinking at this time. When you read the *'detailed'* testimonies of survivors in Chapter FR6 of (13) [4.7] it is difficult to see how JAIC could have concluded *'beyond doubt'* that there were repeated metallic noises from the bow area, as very few survivors heard anything like them.

Say that the upward load was P2 (including the visor weight). The load P2 causes a tensile force 2.67*P2 in each hydraulic piston and a compressive load of 2.16*P2 in each hinge. See figure 3.9 below. JAIC assumes that the compressive load 2.16*P2 was enough to break a hinge and that the tensile load 2.67*P2 was enough to rip off a piston from its support. Nobody heard when the pistons' supports were ripped away and when the hinges broke.

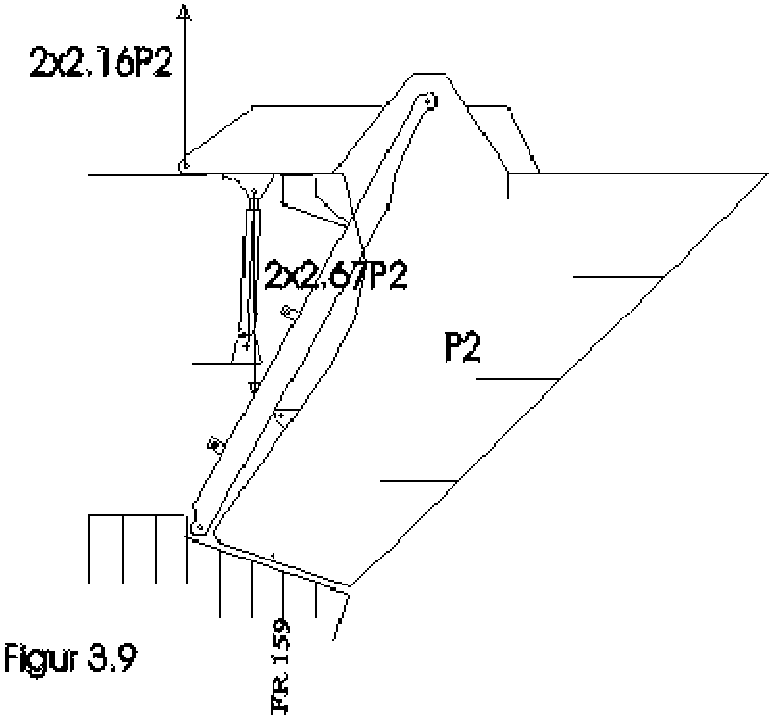

Figur 3.9

When the deck hinges had failed and the lifting pistons were loose, JAIC alleges that the visor moved forward and rested on the inner ramp and tried to push open the inner ramp from aft.

3.10 THE JAIC DAMAGE ALLEGATIONS - THE INNER RAMP

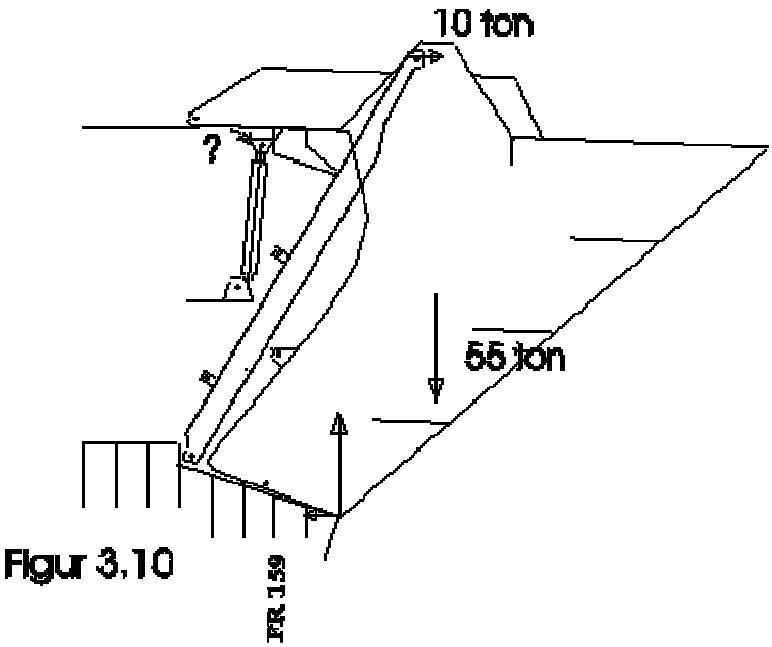

Figur 3.10

If the visor was loose as shown above, it would probably move forward and rest on the ramp, which protrudes up into a recess built on top of the visor. See figure 3.10. Actually the bottom of the visor would rest on the extension of the car deck - the fore peak deck - forward of the ramp, the top aft end of the ramp recess on top of the visor would rest against the top of the ramp and the lifting pistons would rest against the deck beam at fr. 159. If a wave load exceeding the weight of the visor was acting on the visor, it would lift the visor up on the focsle deck aft of the visor! This did not happen. As can be seen from the geometry of the arrangement the hydraulic lifting pistons upper eyes must eat through the deck beam at frame 159, before the visor recess starts to touch the ramp top, and nobody heard this.

Note August 2000 - The Independent Fact Group, Stockholm, has in the spring 2000 presented an analysis to the effect that the visor could never have had cut through the deck beam at frame 159. There are two reasons for this - (a) the cutting edges - the upper eyes of the lifting pistons on the visor arms are completely undamaged - not even the paint has been 'cut' off, and (b) from pure strength of material theory (cutting) the relevant cutting force (forward) cannot be achieved. The question if the deck beam is still undamaged remains unanswered. The Fact Group web page is http://factgroup.tripod.com - visit their site!

However, JAIC alleges that the recess of the ramp at the top of the visor now pushed forward the ramp, which then was dislodged from two hooks and four side locking pins/bolts. This should have been taken place at about 01.13 hrs. Nobody heard this either.

The JAIC allegation is not supported by any facts or findings anywhere. If the visor ramp recess had dislodged the ramp from its locks, you would expect the recess to be damaged, but only some stiffeners on the port side are bent a little - the plate is straight and the aft, lower edge of the recess is straight and undamaged.

Furthermore, the ramp hooks have not been salvaged and brought to the surface and to a laboratory for investigation. The JAIC states that the hooks were locked before the accident [1.15.5], so you would expect that they had been broken, but there is no proof for this. JAIC has also stated that the four side locks were engaged before the accident, but it is not clear how and when they were damaged, e.g. dislodged by the visor pushing on the ramp top.

The longitudinal load pushing the ramp forward should have been of the order 10 tons (0.10 MN) [4.23] (to counter the moment trying to tip the visor forward) but probably less as the visor was kept in place also by the bulkhead at fr. 159. As there were six connection points between the ramp and the hull - two hooks and four locking pins/bolts the average load on the lock was only 3-4 tons. Evidently the visor resting on the ramp top could not have ripped apart the hooks or the pins/bolts. So what actually happened?

3.11 THE JAIC DAMAGE ALLEGATIONS - INNER RAMP OPENING/LOSS OF VISOR

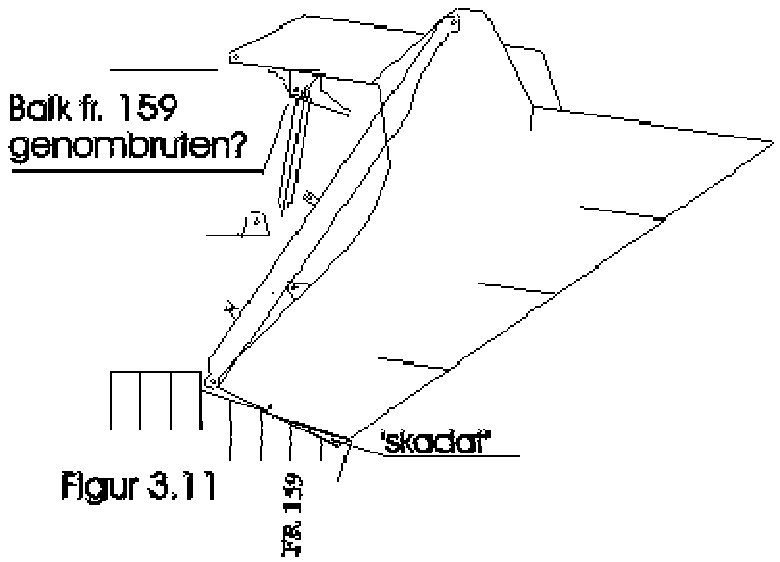

Figur 3.11

After the ramp had been dislodged from its locks, JAIC alleges that the ramp shifted forward to a partly open position and little water flowed in. See figure 3.11. The time for this alleged event is at 01.15 hrs, when it was observed by 3/E Treu on the VDU of the garage in the ECR [1.9], but when it was not reported by the engine crew to the bridge [4.23].

Soon thereafter the visor was lost and the ramp was pulled fully open. A lot of water could now enter the car deck. This is described in chapter FR12.6.2 of the Final Report.

According to JAIC the garage filled up with 300-600 tons per minute and after a couple of minutes the ship heeled 20° (when there was 1 000 tons of water on the car deck). It is interesting to note that the ramp on the wreck is in the partly open or almost closed position as shown in figure 3.11. With the ship heeled 34° it is easy

to visualize how an impact load on starboard side lifted the visor over the ramp [2.8]. There is no mention at all about a sudden list 50° to starboard, up righting and a new equilibrium at 15° starboard [3.16] and that many people were hurt already then.

Addendum February 2001 - the JAIC states that the visor lifting hydraulics ripped open the deck plate in front the deck openings for the hydraulics port and starboard and also ripped open part of the front bulkhead - its rounded top part. However - no real pictures are shown of the alleged damages in the Final Report - actually no pictures of the starboard focsle deck and front, collision bulkhead are shown at all. In August 2000 private divers filmed a large opening in the starboard front bulkhead about three meters below the focsle deck - see picture to the right. This opening does not extend up to the foclse deck! Thus - the visor hydraulics could not have caused the damage to the front bulkhead.

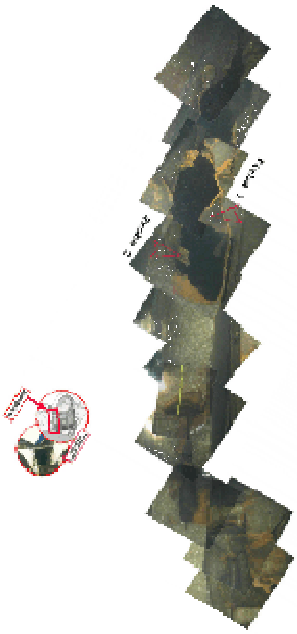

3.12 THE JAIC DAMAGE ALLEGATIONS - THE LOSS OF THE VESSEL

After the ship had heeled 20° with 1 000 tons of water on the car deck, the JAIC alleges that the vessel was lost and sank without tipping upside down. How these events happened is not fully explained in the Final Report, [4.20 and 4.21].

3.13 THE GERMAN GROUP OF EXPERTS

The German Group of Experts has made an excellent job (11) to establish first the actual condition of the visor and the inner ramp and second what actually happened aboard by interviewing surviving crew and passengers and other people, who had previously worked on or travelled with the ship.

Note August 2000 - the full German report was published on the internet in June 2000 http://www.estoniaferrydisaster.net

3.14 THE ACTUAL CONDITION OF THE VISOR

According to the Commission (13) the visor was in excellent and original condition without any modifications done to it during 15 years and without wear and tear. According to the German Group of Experts (11) the visor was not maintained properly. The Final Report does not mention the following.

The rubber packings were not renewed when worn and the visor was not weather tight. Also the pre-tension function of the rubber packings was lost, and this had the effect that the visor was vibrating/shaking at sea within the play of the three locks. The German Group of Experts did not point out clearly that this meant that the load transmission between visor and hull was modified and that more load was now put on the hinges [3.2].

Severe structural damages had been caused to the visor in the winter 1993/4. The result was that the whole geometry of the visor was changed and that nothing fitted anymore.

Note August 2000 - the writer now believes that the Atlantic lock did not fit at all and was thus not in use when the accident occurred.

The deck hinges had been manipulated. In fact the Germans showed that the hinge bushes had been replaced in such a manner that their load carrying capacity was drastically reduced. However, as shown in [3.3], the hinges were only required when opening and closing the visor, when the maximum load experienced was of the order 119 tons (in tension), when the visor was almost closed and the visor arms were horizontal. Had the hinges been broken in service, this would have taken place when the crew tried to open the visor in port. As the visor was clearly opened and closed at Tallinn on the 27th of September, the visor hinges could not have been so bad as suggested by the Germans - the load carrying capacity had been reduced by the burning marks to a mere 20% of the original load carrying capacity (page 16 of (11)).

The Atlantic lock had been renewed and reinstalled at a different location already in 1981/2 with only 3 mm welding seams between the bushings/lugs instead of 8 mm original. The lock had also been repair-welded in a very unqualified manner that resulted in considerable loss of it load-carrying capacity *(X ... has cut off the upper parts of the three steel lugs holding the bolt .... bushings .... After having removed these parts he has welded the bolt ....bushing into positions, fitting .... the changed position of the visor lug...).* The visor lug had also been manipulated in different ways obviously to make the bolt fit through the bore of the lug.

The Atlantic lock hydraulics were not working and the locking pin had to be hammered in and out of the lock. The inside of the visor was covered by a hydraulic oil film.

Note August 2000 - the Germans have not concluded, as this writer, that the Atlantic lock was probably damaged before the accident and was thus not even used on the fatal voyage.

The side locks had a play of 10 mm and it had to be assumed that the condition of the side locks were no more original.

3.15 THE ACTUAL CONDITION OF THE RAMP

According to the German Group of Experts the ramp was also not maintained properly.

The ramp weather tightness was not maintained. The Germans found that one hinge was definitely damaged and that two side locks were probably not lined up and could therefore not be used. This meant that the ramp was leaking. However, the leaking could not have been serious and the crew was aware of the problem and fitted temporary packings (by cloth and mattresses) to stop or reduce the leaking [2.21]. The Germans make a big story about this defect, but the writer thinks that the defect was not particularly serious and did not affect the seaworthiness of the ship. The Commission in (13) says that the ramp was weather tight and undamaged.

3.16 THE GERMAN DAMAGE ALLEGATIONS - THE VISOR

The German Experts allege that the primary causes for the sinking of the Estonia were (a) the extremely bad maintenance condition of visor and bow ramp, their hinges and locking devices, in connection with (b) a completely wrong loading of the car deck and a highly excessive speed under the prevailing wind- and sea state conditions, which had been forecasted (11).

With regard to the visor the Germans suggest that it was full of water, so the ship trimmed on the bow. Water also leaked onto the car deck through the leaking ramp. The Germans do not quantify the leakage in tons/minute or comment upon the fact that water leaking onto the car deck is drained out through the scuppers. The Germans then suggest that the visor hinges broke first (and not last as alleged by the JAIC [1.11]) followed by the side locks. The visor then apparently moved forward and dislodged the ramp from its locks as early as 00.45-00.46 hrs and fair amounts of water started to enter the car deck. The visor was held back by the hydraulic pistons resting against the bulkhead/beam at frame 159. The inflow in tons/minute is not quantified.

The Germans then suggest - without published proof - that the crew observed the loose visor, reduced speed and turned the ship into the wind and tried to secure the loose visor (item (g) on page 37 of (11)). The ship was then upright, but at 01.02 hrs the ferry suddenly and abruptly heeled rapidly to starboard to an estimated angle of about 50°, however, almost up righted shortly afterwards and then took a list of about 15° to starboard, which was slowly increasing. This is a very important observation backed up by the proof that many persons aboard hurt themselves and loose items fell when the ship heeled over. The Final report (13) does not mention anything of that.

Interestingly, the Germans then assume that the starboard side of the visor was pushed upwards due to buoyancy caused by the extreme heel, which also broke the Atlantic lock, and the visor was now only connected to the vessel by the two lifting cylinders.

3.17 THE GERMAN DAMAGE ALLEGATIONS - WATER ON THE CAR DECK

The Germans then suggest that the list increased due to additional water quantities on the car deck streaming in through the partly open bow ramp, all of which accumulated at starboard side, and shifted the cargo and led to the increasing list.

Then the Germans make an incorrect suggestion. They say:

> *' ... at about 01.20 the visor was moving forward whilst the hydraulic cylinders broke through the front bulkheads and the visor separated from the vessel, the list then must have been 50°-60° and water streamed onto the car deck as well as onto the lower decks in increasing quantities'.*

What the Germans fail to realize is that at 50°-60° list the vessel is never stable with water on the car deck - she will always turn upside down. At 50°-60° list no water can stream from the car deck onto the lower decks as the car deck is watertight and the openings to the lower decks are high above the alleged water on the car deck, [2.16 and 5.5].

Note August 2000 - the Germans (Mr. W. Hummel) has later admitted in a newspaper interview that the ship should have turned turtle at this time.

As can be seen from figure 3.10 the visor can hardly dislodge the visor before the hydraulic cylinders broke through the deck beam at frame 159.

Therefore the German accident scenario is not convincing. So how could the 'Estonia' sink?

3.18 THE SAUNA WAS FLOODED AND NO. 1 DECK WAS FLOODED

The sauna is on the tank top (deck no. 0) forward. The Germans say in (11) (page 36) that:

> *'According to statements of most survivors, in particular of the key witnesses ..... Passenger CÖ (cabin 1049 - 1st deck) ... Passenger MN - cabin 1027 - 1st deck, Passenger BN - cabin 1026 - 1st deck) ..... the sequence of events must have been somewhat different from what the JAIC has found and also what the authors Hellberg/Jörle assume in their book 'Katastrofkurs' (10), because ..... (b) there was water on the 1st deck, ... , in particular in the forward part, already before the sudden starboard heel occurred; (c) the sauna/swimming pool compartment on 0-deck ..... was flooded and under pressure, i.e. open to the sea, before the sudden starboard heel occurred .... '.*

There are several other witnesses stating that there was water on deck no. 1. The Commission in its Final Report ignores all these testimonies, because it cannot explain how water flowed up on deck no. 1 before the sudden starboard heel occurred.

The writer finds it amazing that the JAIC ignores clear statements to the effect that 'Estonia' was leaking. These statements might not have been clear when the JAIC made its first statement on October 4, 1994 [1.4] but must have been clear later. The statements about water on the car deck are not very convincing - the third engineer says he saw water on the car deck, the systems engineer says he didn't see any water on the car deck, but that the third engineer told him, that there was water on the car deck, and the motor man says that he saw water on the car deck (after the sudden listing had taken place (at 01.15 hrs?) and when all water should have been down in starboard aft corner), [4.7 and 4.23]. Why the JAIC believes a third engineer saying that there was water on the car deck? Why believe him, when according the laws of nature, a ship with water on the car deck tips upside down, and the 'Estonia' did not do that? There are many questions that the JAIC does not answer in (13).

CHAPTER 4. THE FINAL REPORT

4.1 THE FINAL REPORT

The Final Report (13) was published on December 3, 1997. It does not mention any other cause of accident than water on the car deck in the superstructure. It does not describe how water on the car deck in the superstructure could have sunk the vessel, i.e. how water on the car deck replaced 18 000 m^3 air in the hull below the car deck. The following is a short review of the Final report considering what has been reported in previous chapters of this book. The interested reader should have a copy of (13) available for easy reference (you find it on the internet). When reference is made to the Final Report it is preceded by letters FR.

4.2 THE ACCIDENT ACCORDING TO THE JAIC

The description of the accident in Chapter 1 on page 22 of the Final Report is completely different from what is described in this book [2.2].

Everything was normal according to the Commission until Linde on the car deck

> *'shortly before 01.00 heard a metallic bang from the bow area when the vessel hit a heavy wave.'*

The text in italic is quoted from the Final Report. The ramp was in place, there was no leaking, and the garage in the superstructure was dry, which Linde reported to the bridge. Linde then returned to the bridge, where he met the Master. Then nothing happened, except that Linde was sent down again to check noises on the car deck [1.22]. How the Commission knows that it was a heavy wave that hit the 'Estonia', we do not know.

> *'At about 01.15 the visor separated from the bow and tilted over the stern. The ramp was pulled fully open, allowing large amounts of water to enter the car deck'.*

Nobody saw the ramp fully open, [4.7 and 4.23]. This means that three visor locks, two visor hinges, two visor lifting pistons had been ripped off, that the lifting pistons had eaten through the bulkheads at fr. 159 and that two ramp hooks and four ramp lock pins/bolts had been ripped apart during circa 15 minutes between 01.00 and 01.15 hrs, and that no particular noises had been heard on the bridge, even if noise was allegedly heard elsewhere on the ship, when the flipping visor had pounded against the fore peak deck. The Final Report does not say that the JAIC had previously reported that the ramp was partly open, more open and later closed, [1.11 and 1.15].

> *'Very rapidly the ship took on a heavy starboard list.'*

The report does not mention that most survivors said that the vessel listed suddenly to 50° starboard, when many persons were hurt, and then came back to upright and then found an equilibrium at 15° list and that this took place at 01.02 hrs 3.16.

> *'Passengers started to rush up the staircases and panic developed in many places'.*

The report does not say that many passengers left deck no. 1 before the listing occurred and reported that there was water on deck no. 1 1.22 both to the reception (which advised the bridge) and to the crew.

'The list to starboard increased and water had started to enter the accommodation decks.'

The report does not define the accommodation decks, which are decks nos. 1, 4, 5 and 6 for passengers and nos. 7 and 8 for crew. Evidently no water on the car deck in the superstructure could ever enter

accommodation deck no. 1 below inside the hull, when the list increased. Evidently a lot of water entered accommodation decks nos. 4, 5 and 6 in the deck house, when the ship listed >30° and windows were broken, and at 34° list the ship should have turned upside down, [2.16 and 5.5]. The report does not mention this.

> *'During the final stage of flooding the list was more than 90 degrees. The ship sank rapidly, stern first.....'*

You wonder what the final stage of flooding means. Nowhere in the JAIC scenario is it explained how the 'Estonia' flooded the 18000 m^3 of 14 watertight compartments in the hull below the car deck (engine room, accommodation on deck no. 1, sauna, tanks, etc.), so she could sink.

The JAIC description of the accident is an amazing distortion of the testimonies of most survivors. Chapter 1 of the Final Report shows clearly that the Commission is only promoting its cause of accident, which was established a few days after the accident [1.4].

4.3 OWNERSHIP AND OPERATING HISTORY

There is nothing special to report about the ship's 15 years past history in the Final Report. It was a good ship. But the Commission does not explain why the deadweight is reported to be 3 006 tons on page 28 of the Final report, while it was reported to be 3 345 tons [1.1] in Lloyd's Register's ship data book. It is probable that 339 tons weight has been added to the ship in operation, which naturally affects stability, even if stability should not have been a problem for the 'Estonia'. The Final Report does not mention that the ship was 339 tons heavier than built (which you in fact would expect after 14 years' service).

4.4 THE VESSEL AND ITS STABILITY

The JAIC has no particular comments on the vessel itself in Chapter 4 of the Final Report. Evidently the vessel was lost, so only inspections of records are reported and the records were in order. Normally an accident investigation cannot rely on inspection of records only to assess the condition of the ship before the accident - many items are only inspected every 5 years and no guarantee at all, that there is no wear and tear.

The Germans (11) have done a more complete inspection of the ship based on the u/w videos and interviews of former crew members, etc. and found that many parts of the ship were worn, torn, missing or damaged, [1.21, 3.14 and 3.15].

It is stated in the Final Report that in normal sailing condition the vessel had a transverse metacentric height (GoM) of about 1.2 m in combination with a slight trim by the stern and a draft of about 5.5 m. As seen in [2.16 and 5.5] the writer has estimated the required GoM to 2.1 m, i.e. 75% bigger (and a similar figure was given to him by the Germans (**Note May 2000 by writer** - correct GoM was probably 1.2 meter - it doesn't matter for the general discussion here and elsewhere in this book - the conclusions are the same and valid), and all stability calculations were based on the bigger GoM. In spite of this the JAIC obtains similar results of how much water on the car deck is required to heel the vessel, [2.16, 4.6, 4.18 and 5.5]. One reason is the assumed permeability of the garage and different ways how to calculate the heeling moments.

4.5 OPERATIONS ON BOARD

Operations aboard were organized as in most ships, i.e. along traditional lines. The writer's personal observation is that the 'Estonia' was exactly organized as the ferries in the Red Sea, that the writer knows a little about. (**Note May 2000 by writer** - I was wrong; The 'Estonia' had no realistic or working emergency organization).

4.6 THE CIRCUMSTANCES OF THE VOYAGE - ACTUAL STABILITY

The Final Report - Chapter 6 - states:

> *"On departure from Tallinn on 27 September the 'Estonia' was seaworthy and properly manned. The maintenance standard of the vessel was good as witnessed by various instances".*

Furthermore the Final Report states:

> *"The transverse metacentric height GoM was 1.17 m. According to the valid stability booklet the minimum required metacentric height (GoM) was 0.63 m".*

It is very unlikely that the minimum operating GoM could have been 0.63 m. With such small GoM 200 tons of water on the side of the car deck (leverage 10 m) would have heeled the 'Estonia' (displacement 13 000 tons) 13.72°. My conclusion is that the 'Estonia' must have had a much larger GoM to survive two compartments flooding below waterline [4.4].

4.7 SUMMARY OF TESTIMONIES BY SURVIVORS

The Final Report includes only *'edited'* testimonies. All testimonies - mostly simple questionnaires filled in by the police - have first been translated into Swedish and English and have then been *'edited'* by Mr. Bengt Schager, [1.18 and 1.19]. The *'editing'* means that items that were not considered important by Schager were deleted. This is shown clearly in the *'editing'* of testimonies of passengers, who have also talked to other parties. Many interesting remarks have just disappeared in the *'editing'* by Schager. In (12) this is explained as witnesses' remarks being of no importance.

It is interesting to note in the Final Report that the watchman Linde, who in [1.22] of this book is described of giving two versions of what happened aboard just before the accident, in the Final Report gives eight versions of the same events. It should be clear that Linde has been forced to modify his first statements to suit the *'water on the car deck'* scenario.

In all eight versions there is no mention at all about passengers reporting water on deck no. 1 in (a) a telephone call (to second officer B (Kannussar)) on the bridge and (b) when meeting Linde in the stairwell before the sudden listing occurred as reported by Linde in DN [1.22]. **Why would Linde have made up a story about water on deck no. 1 to an Estonian speaking journalist from Dagens Nyheter in October 1994?** There is one mention in (13) that *'deck 1 is under water'* or *'there is water on deck 1'* by passengers, when Linde had reached deck no. 7.

It is interesting to note that Linde never actually says and that nobody in the Commission asks him, when the sudden listing occurred and what it felt like.

Regardless, it is quite clear that Linde never saw any water on the car deck in the superstructure and that the inner ramp was always weather tight before 01.00 hrs.

3/E Treu has been interviewed seven times and gives many different descriptions of what happened. Interestingly enough previous reports [1.22] that Treu overheard Lindes walkietalkie conversation with the bridge (10) have been deleted and there is no mention that Treu tried to ballast the ship upright. The Final Reports instead says that Treu heard Linde saying (from the car deck around 01.15 hrs) that 'there is water on the car deck'.

Treu says that

> *'the effect of inflow of water at 01.15 was immediate, the ship developing a 2-3 degree list to starboard'.*

Treu does not mention the sudden listing 50° to starboard at 01.02 hrs reported by survivors to the Germans (11) [3.16]. Treu never saw the ramp fully open [4.23]. There are several testimonies about people who had fallen on the decks and were hurt after the first sudden listing. This shows that the sudden listing was considerable and not like Treu's 2-3 degrees increasing to 20° during a few minutes.

There were 19 survivors who escaped from cabins on deck no. 1 below the car deck. Many noticed water on deck no. 1 before 01.00 hrs and that the water came from below, even if the 'edited' testimonies minimize the importance of these observations. However, not even the Final Report can disregard the testimony from JS in the foremost cabin on deck no. 1, who reported that water came into his cabin on the floor, when the alarm in Estonian was given. The JAIC has never asked, where this water came from - according to JAIC the 'Estonia' was trimming several meters on the stern and listing 30-40° to starboard at that time, so no water on the car deck could have flowed forward (upward) to JS cabin (no. 1120 in the centreline most forward on deck no. 1).

Note September 2001 - The Swedish journalist Knut Carlqvist, Ph.D, has in his Swedish book 'Tysta leken'.(May 2001) carefully studied the testimonies of the survivors from deck 1. The majority of these survivors reported two, three hard noises from below, as if the ship collided with something before the sudden listing took place. Water definitely flowed up from below, i.e. the bottom (or the bilge) of the ship hull must have been damaged in one or more compartments. By checking official video films made by the JAIC of the hull it was found that the films have been cut and edited so that it was impossible to follow the documentation of the hull. There are no reference points; the films start and stop at unknown locations and you have today no possibility to verify the hull using the official films.

It is said that several (un-named!) witnesses passing deck no. 2 up the staircase reported *'cold water running down the bulkhead and onto the floor'*. One witness saw *'water spraying from chinks in the closed door leading to the car deck'*. How this is possible the JAIC does not say, as water in the superstructure on the car deck trims and heels the ship and collects in the lowest part (in the starboard aft corner) and does not flow down into the hull and deck no. 1 forward. The writer does not believe these testimonies and assume that they are made up - *'edited'* - by the JAIC.

There are testimonies in (13) from the training second officer, the third engineer, the motorman, the systems engineer and Linde, that the 'Estonia' sank with the stern first and that the visor was missing at the bow. Some of these witnesses had jumped into the water without life jackets and had had difficulties to get into a life raft or on a life boat, but they all saw that the visor was missing at the bow. However, none of them have said that the inner ramp was open! It is therefore not clear if the ramp was open, when the ship sank or if it had closed itself before the ship sank.

The Final Report does not mention that other survivors reported that the ship sank with the bow first. It seems that such reports have been 'edited' away in (13).

4.8 LIMITATIONS OF THE DIVING SURVEY

In FR8.4 it is clearly said that the accident underwater diving survey was limited to only the bridge and the vessel's bow area [1.14]. The diving survey was supplemented by ROV inspection of certain areas, but the certain areas are not specified. You wonder why the compartments in the hull below deck no. 1 were not inspected by divers, as survivors had indicated that these compartments were flooded before the sudden listing occurred. In fact the Swedish Maritime Administration's dive survey [1.14] included the no. 1 deck [4.14].

In FR8.5.1 it is said that no external damage other than that in the visor and forward ramp area was observed on the wreck. But according to FR8.4 divers did not inspect the whole ship and ROV inspection was only done of certain areas, so the statement is not proven. Dr. Witte on pages 66-67 in (12) suggests that after having observed all the video films that

> *'You can clearly see the starboard side of deck 0 is above the mud so that you should be able to observe a hole. When I watched the video film and when the ROV, the Remote Operated Vehicle with the camera, approached the area where the supposed hole was, the picture disappeared [1.23]. Then the picture continued at another location. On the video film the time is shown and other data, i.a. the depth, and it is easy to see that the video has been interrupted at the first location and restarted at a second location'.*

Witte adds that the German police from the copy of the video could not say whether the copy was *'edited'* or the recording was simply stopped.

In FR8.5.1 is another interesting statement - *'A door in the front bulkhead on deck 5 was open'*. This is the part of the ship (the deck house (!)) that the JAIC considers watertight in Chapter FR12 4.18. Note that there were also doors in the aft bulkheads on decks nos. 4 and 5.

It is very strange that the car deck was not inspected. If the ship had sunk with the stern first, all the vehicles on the car deck would have shifted to aft and the bow area at the ramp would have been free. If the vessel had sunk with the bow first cars and trucks could have rolled forward and pushed open the ramp. It should have been easy to cut a hole in the port side of the garage for access [4.14].

4.9 DESTRUCTION OF EVIDENCE

The locking bolt for the bottom lock was removed and brought to the surface (FR8.4). It is not stated in (13) that this part was then thrown back into the sea without even a photograph being taken of it. It is probable that scratch marks on the locking bolt indicated that the visor had been stricken off the ship sideways. In FR8.6.1 it is said that the bolt was only worn at the contact area i.w.o. the mating lug. Then it is said that no other damage to the bolt was noted. Such a statement does not exclude that there were scratch marks on the bolt, which of course is not a real *'damage'* according JAIC. Other *'damages'* not mentioned were marks on the bolt, that it had been hammered in and out of its housing [3.14]. These marks are clearly shown on the video films and reported in (11). The JAIC does not mention them in the Final Report.

The JAIC has orally stated that the reason for throwing the bolt back into the water was that the helicopter was full and that the bolt was too heavy - its weight was 30 kilograms! However the JAIC brought up eleven other parts of the ship (as per FR8.4), none of which was thrown into the water and, including e.g. the bell, which was much heavier (70 kilograms) than the bolt.

Evidently the throwing away of the bolt was pure destruction of evidence.

Note August 2000 - in view of the writers latest conclusion that the Atlantic lock was not even in use during the fatal voyage, it is probable that the condition of the bolt concluded just that - maybe the bolt was covered by oil and dust and dirt showing that it had not been used, or maybe it was slightly bent due to previous damage so it did not fit? - In any case, the bolt was thrown back into the water.

4.10 VISOR WAS STRICKEN OFF SIDEWAYS

In FR8.5.3 is the visor damages outlined. It is said that the bottom of the visor was heavily pounded and distorted (figure FR8.6) and compressed upwards up to about 0.5 m. This is misleading as only the forward part of the visor bottom was damaged - see figure 3.11. If the accident took place as outlined by the JAIC these damages should have been made after the locks had failed and when the visor was flipping up and down around the deck hinges, and there must have been hard noises every time the visor slammed down on the forepeak deck.

It is not pointed out that the damage to the recess for the port locating horn (fig. FR8.8) indicates that the visor was stricken off sideways from starboard. The reason is that the starboard side plate of the recess is ripped open as if the starboard side had been in contact with the horn, when the visor was pushed sideways against it.

It is furthermore not pointed out that the starboard attachment structure of the bottom lock mating lug on the visor is buckled (fig. FR8.10). This damage together with the fact that the port attachment structure is cracked (fractured both vertically in the face plate connection to the lug and horizontally in the web plate) and that the lug itself is bent to starboard (fig. FR12.18) indicates that the visor was stricken off from starboard. The damages are not the result of the lug being pulled away from the locking bolt in its housing [3.7] and the damages are unlikely the result of the visor flipping up and down around the deck hinges and slamming into the forepeak deck [Appendix].

It is pointed out in the Final Report that you can see the inside of the ramp deck housing on the visor on fig. FR8.7. The two outboard stiffeners on port side are bent a little. The outside of the housing (fig. FR8.4) is virtually undamaged. The JAIC has suggested that the visor housing was resting on the top of the ramp before the visor was pulling out the ramp, but the damages inside the housing are too small to support that suggestion [3.14].

The conclusion should be that the visor was stricken off the ship sideways from starboard, when the ship with >34° list slammed the visor side into the wave surface [2.8].

Note July 2000 - actually, it is quite probable that the bottom lock damages were incurred before the fatal voyage by an impact/collision force from starboard to port and that the bottom lock could not be used at all.

All the information in the Final Report supports this conclusion. The damages to the bottom structure of the visor were incurred, when the visor was loose and slammed against the forepeak deck, when the list was >34° and just before the visor was lifted off.

Note August 2000 - however, the fore peak deck, against which the visor should have slammed is intact and un-damaged! The Independent Fact Group, Stockholm, has suggested that many of the visor bottom damages were caused when the visor was salvaged in November 1994.

4.11 RAMP DAMAGES

In FR8.5.4 is the ramp damages described. It is not stated clearly that the ramp was never inspected from inside the garage. It is stated that the ramp was inspected primarily from its lower side (sic!) due to limited access to the upper side. The statement is confusing, as the whole outer side (bottom/lower side when the ramp is

lowered) was very easy to access, while the inner side (top/upper side of the ramp, when the ramp was down) was never accessed or inspected at all. Therefore the ramp hooks on the inside were never inspected! Nor was the top plate of the ramp itself inspected. As it had been suggested several times that the ramp was pushed open a little from inside by shifting cargo, when the ship sank (on the bow!) to the position the ramp was found in, it is amazing that JAIC never bothered to make a full inspection of the ramp from inside.

It is said that the two port hinges at the bottom of the ramp were torn apart and it is indicated that this was a result of the accident. However, the German Group of Experts (11) has clearly shown that these were old damages reported by the ship's staff to the Owner and had been put on a repair list! It is said that the hydraulic actuators of the ramp had failed, but there is no proof for this. It is said that the wires preventing the ramp from falling down had detached from the lugs both sides, but there is no proof for this. There were deep indentations on the outside beams, but there is no proof that it has anything to do with the accident. It is stated that the ramp port side beam was damaged in several places, but again there is no proof that it has anything to do with the accident. It is said that the lugs for the pull in locking hooks were twisted, but that the hooks themselves could not be inspected. It is said that the side locking bolt pockets were twisted to open (i.e. were damaged except the lower port one). There are no pictures of all these alleged damages.

There is no proof whatsoever in section FR8.5.4 that the visor has pulled open the ramp.

Note August 2000 - many proofs that the ramp was never pulled open have been presented during 2000 by i.a. the Independent Fact Group - the ramp locks were not ripped open as alleged, they are intact; the ramp side guard rails would first have been damaged by the side lock bolts and would later have prevented the ramp from closing, the guard rails are first seen intact on the early video films and have later been cut off (!) and removed, probably during the dive survey in December 1994.

4.12 THE VISOR BOTTOM LOCK

It is said that the recovered parts have been investigated with regard to properties of the material. This is not true. The locking bolt material was never checked.

4.13 THE VISOR SIDE LOCKS

The side locks were not recovered from the wreck. It is said that the divers estimated the play in the lock to ten millimetres. The visor lugs are said to have been torn off from the visor in the downwards and aft directions. If you refer to [3.8] you see that the visor lugs should have been torn straight away from the visor, if the bottom lock had failed and the deck hinges were intact. The Germans say (11) that the lugs were torn off in the downwards direction (after the deck hinges had failed). Actually it is quite clear that the lugs sheared off in the sideways and upwards directions, when the visor was stricken off sideways (when the ship had >34° list) [4.10].

4.14 DIVING INSPECTION OF NO. 1 DECK - WHY WAS THE GARAGE NOT INSPECTED?

The no. 1 deck was in fact inspected by divers (part FR8.9 and fig. FR8.27). Deck no. 1 was inspected by divers of the Swedish Maritime Administration to establish the condition of the ship for possible salvage. It seems the divers made two holes in the port side of the 'Estonia' at about frs. 68 and 110 and entered the third and sixth cabin compartments (from forward). The diver was then on top of the sauna compartment and could easily have descended to inspect the sauna compartment.

Note August 2000 - according to the German report in June 2000 one diver actually went down and inspected the sauna for 1 hour 6 minutes on 3 December 1994. This inspection was deleted from the dive log.

It is probable that there is damage in the starboard side shell in the sauna compartment on deck no. 0 at frames 98 - 110 or further aft. As an access hole is already made in the port side on deck no. 1 level, it is extremely simple for a diver to go down again and inspect the sauna. It can be done very quickly. If the sauna is full of mud it is clear that there is a hole in the starboard side.

Note August 2000 - the starboard shell damage is probably in the stabilizer compartment aft of the sauna compartment.

It is said that (FR8.12) that the divers could only inspect one watertight door on deck no. 1, which was closed. However, the diver's route on figure FR8.27 indicates that the diver passed very close to two watertight doors and was about 6 meters away from a third watertight door, so it is strange that the positions of two other doors were not noted.

An observation. If the divers could cut two holes in the side to enter deck no. 1, why did they not cut a hole in the side of the garage to inspect the ramp and its closing appliances from inside?

Note August 2000 - by studying the official video films which became available in 1999 several independent investigators have shown that the divers were in fact inside the garage and inspected the ramp closing appliances from inside. The ramp closing appliances were not damaged!

4.15 INTERNATIONAL CO-OPERATION

For some reason the Final report has a chapter FR9 about international co-operation. The JAIC work itself is not an example of such international co-operation. It is not mentioned in chapter 9 that IMO resolutions A.440 (XI) and A.637 (16) have regulations for international co-operation of marine accident investigations, e.g. that all details of the accident and all the hearings of any accident investigation shall be public. The JAIC ignored these regulations of international co-operation for 38 months. All details and hearings of the Commission were secret. No explanation for this is given in the Final Report, except a statement that the JAIC considered itself completely independent from the governments of Estonia, Finland and Sweden.

The Final report presents only *'edited'* testimonies of survivors and very strange *'details'* of the accident as outlined in this book. It should be clear to anybody that the Commission prevented international co-operation to improve safety at sea for 38 months.

4.16 THE 'HERALD OF FREE ENTERPRISE'

The Final report mentions the 'Herald of Free Enterprise' in FR9.5. This ship capsized about 800 meters outside Zeebrügge in 1987.

It is said that

> *'When the ship increased speed, the bow wave exceeded the freeboard and water started to enter the (car) deck through the open bow doors. In less than two minutes at least 500 t of water had accumulated on the (car) deck and the vessel capsized'.*

What is not said is that the ship actually heeled 90° in less than two minutes and then struck the bottom, i.e. the ship rested on its port side on the bottom (as the depth was only 12-14 meters) and she did not sink. If the water depth had been larger, the 'Herald of Free Enterprise' would have turned upside down and floated on

the air trapped below the car deck inside the hull. This is what the 'Estonia' should have done with water on the car deck.

It is amazing that the JAIC makes reference to the 'Herald of Free Enterprise', which capsized in less than 2 minutes due to water on the car deck, and still maintains that the 'Estonia' sank for the same reason, even if it took >40 minutes for the 'Estonia' to sink.

Addendum January 2001 - it could be added that the 'Herald of Free Enterprise' turned over so quickly that all passengers in the port outside cabins drowned immediately. The passengers in the starboard cabins, which rested above water, were lucky - they ended up on the inside walls but could not get out from the cabins. The passengers in the full breadth saloons had a terrible experience. The saloons became indoor *'swimming pools'* where the deck, the bulkheads and the ceiling were the sides and where the only opening and escape were the doors and windows about six meters above the water level. Here the passengers were trapped - they could not possibly climb up to the starboard side in the open. In the garage all the vehicles were smashed against each other and the port side and destroyed. No evacuation was possible - the life saving equipment was never used.

4.17 FORCES AND MOMENTS ACTING ON THE VISOR

The misinformation of the JAIC continues in Chapter FR12 with a presentation of various technical investigations.

The forces and moments on the visor were determined by the SSPA (a Swedish research centre). Tests were made in head seas and with the waves 30° on the bow, disregarding the fact that the waves were probably 60° on the bow [4.20]. After a lengthy presentation, which does not explain that the locks and hinges cannot transmit moments and which does not explain how much load and 'moment' are transmitted by other contact points except locks and hinges, e.g. guide horns, vertical rubbers, etc. it is concluded that the maximum load experienced by the visor of the 'Estonia' during the last hour was 3.6 MN upwards (minus 0.6 MN own weight) and 3.6 MN longitudinally aft, i.e. the load on the visor was five to six times the weight. Evidently such a big vertical load - 360 tons - cannot be a buoyancy load, [3.2, 3.7 and 4.23], but is an impact load.

Note August 2000 - for more info see http://heiwaco.tripod.com/eapp2.htm

What is an impact load of 3.6 MN? Say that it is applied over 5 m² vertical projection. Then the pressure applied is 0.72 MP (MegaPascal) or 72 meter pressure head on the visor! You then wonder how long and how often such pressures were applied to the visor. The report does not say! The obvious question, if the impact loads applied to the visor had enough energy to damage the bottom lock, the side locks, the piston supports, the bottom of the visor and the hinges, remains unanswered. If the impact load had enough energy to break a steel bottom lock, it should have been heard clearly on board as a big BANG. But no distinct BANG was ever heard.

4.18 SIMULATION OF FLOODING AND SINKING OF THE VESSEL

In chapter FR12.6 it is said, that we will be told, how the 'Estonia' sank. First we are told what happens with 400 tons of water on the car deck in the superstructure. The 'Estonia' heels 10°. Is that true? We have previously been told that the 'Estonia' had a displacement 11 930 m^3 and GoM 1.17 m (table FR5.1). If we assume that the heeling arm of the 400 tons of water in the side of the garage is 10 m (see figure 2.16.1B), i.e. the heeling moment is 4 000 t-m, then the heeling angle, a, is found from tan (a) = heeling moment/(displacement x GoM), i.e. tan (a) = 4 000/((11 930 x 1.01 + 400)*1.17) = 0.2746 and a is 15.36°.

Actually it does not matter too much if the 'Estonia' heels 10° or 15° with 400 tons of water on the car deck in the *superstructure*, because here is the first acknowledgement by the JAIC that the 'Estonia' actually heels with water on the car deck and that the heel angle is a function of the amount of water on the deck (and the heeling

arm). The water becomes trapped in the outer side of the garage of the *superstructure*. What happens then? The water trims the ship on the stern or bow! The water then becomes trapped in the aft or forward corner of the superstructure between the sloping deck and side.

It means that the water wedge is trapped between the sloping deck and the ship's sides and will not flow down into the hull and the deck no. 1 below, because the openings to the deck below are in a dry spot at the centreline above from e.g. the starboard aft corner of the garage.

Then the JAIC says that 1 000 tons of water on the car deck in the superstructure heels the vessel just over 20°. If GoM was only 1.17 m [4.6] the heel could have been larger - say 30° - it depends on the heeling arm. The situation is very similar to the 'Herald of Free Enterprise', [4.16] and figure 2.16.1C, which capsized with at least 500 tons water on the car deck. So will the 'Estonia' capsize?

The Final report says

> *'As long as the hull was intact and watertight ..... above (sic) the car deck, the residual stability with water on the car deck would not have been significantly changed at large heel angles (Figure FR12.12)'.*

Figure FR12.12, showing that the righting arm (GZ) is positive and increases with the heel until 90° heel, is totally misleading as you cannot assume that the side up to deck no. 8 is watertight. Evidently the 'Estonia' was not watertight above the car deck! No ship is watertight above the weather deck. The superstructure (decks nos. 2 and 3) was in this case open at the bow! Deck no. 4 was the weather deck and the deck house of the 'Estonia' was not watertight above the weather deck. The 'Herald of Free Enterprise' [4.16] was not watertight above the weather deck and she capsized in two minutes with water on the car deck. Evidently the 'Estonia' should have done the same thing, which is indicated in figure FR12.13, where the 'Estonia' capsizes with about 1 500 tons of water on the car deck in the superstructure. But the 'Estonia' did not capsize after 40 minutes. She was floating on the non-weather tight side of the superstructure and the deck house! Why! The answer is that there was no water on the car deck in the superstructure, which was still weather tight. The answer should be that there were thousands of tons of water in the hull below the car deck, which (a) was sinking the ship while (b) it was stabilizing the ship [2.20] and fig. 2.16.2E. The hull was leaking.

The Final Report now says

> *'As soon as water was free to enter the (nos.4, 5 and 6) accommodation decks all residual stability would be impaired and the ship in practice lost'.*

Impaired? Why not say that the righting arm (GZ) is negative and that there is no stability left (like the 'Herald of Free Enterprise')!

'Ship is in practice lost'? Why not say that the 'Estonia' should have turned upside down and floated on the hull with the keel up (which the 'Herald of Free Enterprise' should have done, if the water depth were larger), if there were water on the car deck. But the JAIC cannot admit this, because everyone knows that the 'Estonia' sank slowly and did not turn upside down until very late in the sinking process (when the car deck was actually flooded from deck no. 1 level - see figure 2.16.2E/F).

4.19 WATER INFLOW SIMULATIONS

In FR12.6.2 JAIC tries to explain how much water flowed through the ramp opening.

> *'The results cannot be used to independently prove (sic) a certain time sequence of water inflow',*

the report says. However, the JAIC is brave, so it says that water inflow into the superstructure was 300-600 t/min and that a heel angle of about 20° could possibly have developed within just one or a few minutes. What happens next?

The report says

> *'The successive phases of the capsize are dealt with in more detail further on in this report, where the time sequence and the full (sic) capsize scenario are analyzed based on witnesses' (sic) statements and an interpretation of the results obtained from these simulations'.*

So we have to move to section FR13.2.1 and FR13.2.6 of the report.

4.20 DEVELOPMENT OF THE LIST AND THE SINKING OF THE VESSEL

In Figure FR13.2 of the Final Report the JAIC's course of events is illustrated [2.23].

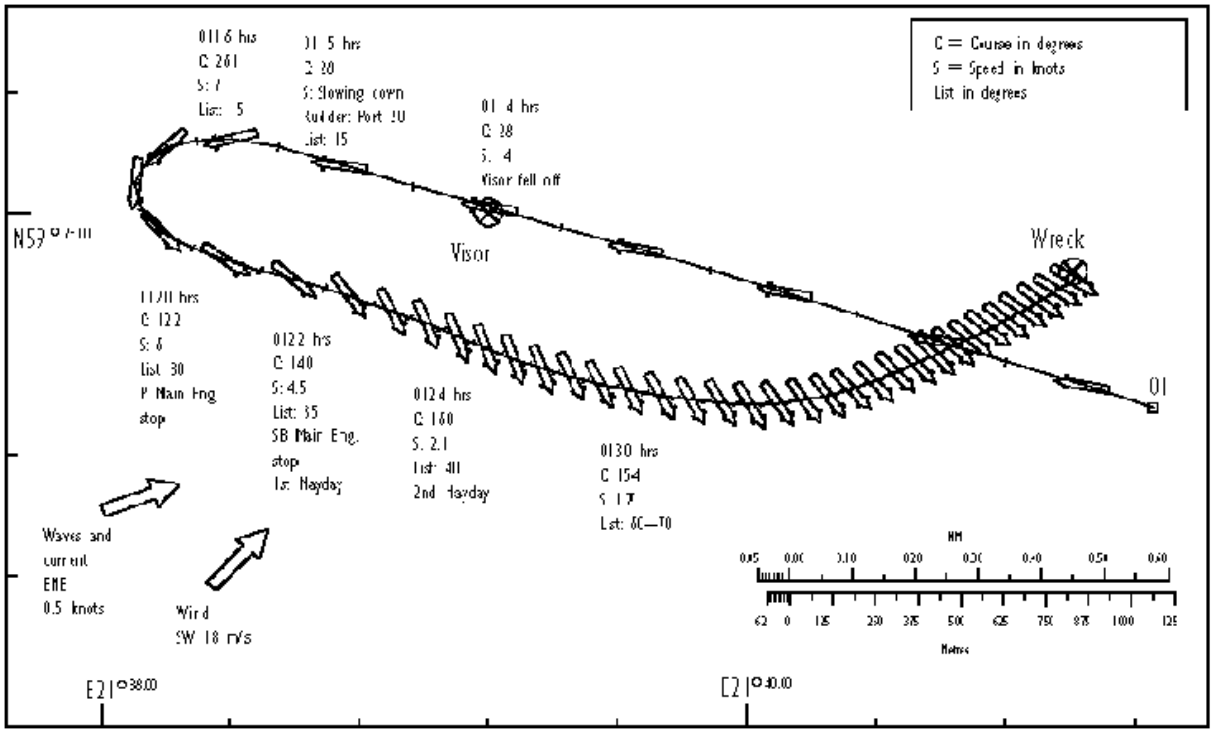

In the figure the visor falls off at 01.14 hrs and between 01.16 hrs and 01.20 hrs the vessel turns sharply 180°, when the speed drops to 6 knots, and sails back to Tallinn on course 107° for ten minutes (but with a starboard yaw of 40-50°, so that the heading (course) is 122-160°. Then she drifts. The figure FR13.2 assumes that the wave direction is ENE (247.5°), while Table FR5.4 says it could as well have been NNE (216°), a difference of 30°. The angle of heel is increasing all the time. The various data in Figure FR13.2 is listed in the table:-

Time	**Course**	**Speed**	**List**	**Water on Car Deck**	**Rate of Inflow**
h.m	°	knots	°	tons	tons/min
01.14	281	14.0	0	0	600
01.15	281	11.5	15	600	0
01.16	261	9.0	15	600	200
01.20	122	6.0	30	1 400	250
01.22	140	4.7	35	1 900	75
01.24	160	2.1	40	2 050	>600
01.30	154	1.7	65	>6 000	-

As can be seen the inflow was 600 t/min for one minute and then no water flowed in (as the list was constant). Then for four minutes 200 t/min flowed in and the list became 30°. Then another 250 t/min flowed in for two minutes and then the inflow was reduced to 75 t/min for two minutes and then suddenly it increased to >600 t/min between 01.24 hrs and 01.30 hrs because at 01.30 hrs the list was 60-70°. Smoothing out the figures we could say that for 10 minutes there was an inflow of about 200 t/min, during which time the ship had relatively high speed and a direction of the bow opening into the waves, and then, when the ship had no speed at all and when the bow opening was directed away from the waves (course 157°) there was 6 minutes of increased inflow of >600 t/min!

Time	**Speed**	**List**	**Water on Car Deck**	**Rate of Inflow**	**Condition**
h.m – h.m	knots	°	tons	tons/min	
01.14-01.24	14.0 – 2.1	0 – 40	0 – 2 050	200	Stable with list
01.24-01.30	2.1 – 1.7	40 - 65	2 050 - >6 000	600	**Unstable**

There is no logic at all here. In the supplements to the Final Report it is shown, that inflow through the bow cannot be 600 t/min with the speed <2 knots and with the bow opening directed away from the waves. Actually the whole plot in fig. FR13.2 is completely unrealistic, as the 'Estonia' should have capsized (turned upside down and floated with the keel up) with only 1 500 tons of water on the car deck in the *superstructure* at 01.21 hrs figure 2.16.1C. You cannot interpret the increased inflow after 01.24 hrs as water on decks nos. 4, 5 and 6, because the water there is not trapped inside the ship but part of the outside sea (through open windows, etc.) and does not heel the ship and does not contribute to loss of buoyancy. Only water trapped on the car deck in the *superstructure* can heel (and trim) the ship! Only water in the hull can sink the ship!

Note August 2000 - the plot Figure FR13.2 above is in fact a falsification. The original plot made by the Kalmar Maritime Academy assumes i.a. that <2 000 tons of water flowed in through the bow opening during the whole accident and that the ship floated high and dry until at least 01.50 hrs and thus could drift with a speed >2 knots. The JAIC falsification consists of increasing the angle of list two times as shown in the figure and the amount of water inside the ship at the given times ten times with no regard to the fact that the ship then would have stopped - and floated upside down).

When the Mayday is sent at 01.24 hrs, the vessel in Figure FR13.2 is about one mile North of the position given in the Mayday - table FR7.3 in the Final Report [2.23], and JAIC does not comment upon this fact. **The JAIC does not explain at all, how they have developed the course of events of the 'Estonia' between 01.14 and 01.51 hrs.** The plot is extremely strange - because on Figure FR17.1 all the other vessels' tracks during the rescue operation are given, but the 'Estonia' is just a black dot at about the Mayday position, which is much further South than given in Figure FR13.2. Why wasn't the 'Estonia' tracked? The Final Report does not say!

The error in Figure FR13.2 is that JAIC assumes that the 'Estonia' was on course 287° at 01.14 hrs and then turned 180° back to Tallinn. There is no proof anywhere in the report, that this was the case. The German Group of Experts have suggested that (a) the sudden listing occurred earlier than 01.15 hrs, at 01.02 hrs, and (b) that the 'Estonia' then turned South and that (c) the 'Estonia' lost its visor later, and this is of course what is suggested in this book. JAIC has never commented upon these suggestions. What is wrong with the assumption that the 'Estonia' turned before the visor was lost? The Final Report does not say! [2.23] is a more logical plot of events.

Actually, the 'Estonia' must have been tracked by both the shore radar station at Utö (in Finland) and by 'Silja Europe' because the track of 'Silja Europe' on Figure FR17.1 starts at 00.12 hrs, i.e. one hour before the 'Estonia' accident started. The 'Mariella' is plotted from 01.18 hrs, so why is not the 'Estonia' plotted from, say 01.00 hrs? It is clear that the 'Estonia' was seen on shore radar, because it is stated that Utö radar station lost the 'Estonia' from the screen at 01.48 hrs [1.11.5]. JAIC does not mention in (13) what happened to the recordings of the radar observations at Utö.

4.21 THE SINKING OF THE M/S 'ESTONIA' - WATER ON THE CAR DECK

Anyway - how did water on the car deck in the *superstructure* sink the 'Estonia'? In section FR13.2.6 it says that

> *'water first entered the car deck along the sides of the ramp as observed by the third engineer at 01.10-01.15. After the ramp had been forced open, large amounts of water are alleged (sic) to have caused the vessel to heel over and a significant list to starboard developed'.*

The JAIC has forgotten that the systems engineer working with the third engineer did not see any water on the car deck and saw that the ramp was closed [4.23]. But note the JAIC lingo - *"large amounts of water are **alleged** to have caused the vessel to heel over"* - they know it is fantasy.

What happened then?

> *'During the port turn (at 01.16-01.20) more water continued to enter the car deck and the list increased to 20-30°, where the vessel for some minutes stabilized as the water inflow decreased'.*

The list became 40°! There was 2 050 tons of water on the car deck in the superstructure. And then?

> *'Water continued to enter the car deck through the bow, but at a significant lower rate',*

the report says. According [4.20] the inflow rate increased three times after 01.24 hrs?

Then the report says

> *'As the flooding progressed, the list and the trim by the stern increased and the vessel started to sink'.*

No time is given for this. Say it is at 01.24 hrs! The Mayday is sent. The list is 40° as per Figure FR13.2. The amount of water on the car deck in the superstructure at 40° list is 2 050 tons as per Figure FR12.13. Then the engine room in the hull is still dry (as reported by the third engineer, who left a dry engine room at 01.30 hrs as per FR6.2.3, when the list was considerable) and the whole hull forward of the engine room below the car deck must also have been dry, as no water can have flowed down there - all the water on the car deck in the superstructure was on the starboard side aft! Nowhere in the Final Report is the trim shown. There is 18 000 m^3 of air trapped in the hull below the car deck! According to JAIC all the watertight doors in the hull below the car deck were closed. There are 14 watertight compartments below the car deck and all were dry! According to all conventional stability theory then 'Estonia' should then have turned upside down, like the 'Herald of Free Enterprise' now, but the 'Estonia' is stable with 40° heel.

There is no chance that the 'Estonia' sinks due to 2 000 tons of water on the car deck in the *superstructure* at 01.24 hrs [5.5]. **She should have capsized**.

According to Figure FR13.2 at 01.30 the list is suddenly 60-70°. During six minutes the list has increased by 30°. How much water is then on the car deck in the superstructure? >6 000 tons according to Figure FR12.13!

How on earth did >4 000 tons of water suddenly enter the superstructure between 01.24 and 01.30 hrs in six minutes? And how is it physically possible that there are >6 000 tons of water on the sloping car deck. Is there space enough? The Final Report does not say. In my opinion it is physically impossible that there could have been >6 000 tons of water on the car deck in the superstructure heeling the vessel 60-70°. The vessel would have capsized already with 2 000 tons.

How could the water on the car deck in the superstructure flood 14 watertight compartments of total 18 000 m^3 below the car deck in the hull? The Final Report does not say. Instead it says

'The sinking continued, stern first, and the vessel disappeared at about 01.50'.

Nobody disagrees that the ship sank at 01.50 hrs (or probably 01.35 hrs), but the report does not say how 14 watertight compartments below the car deck in the hull with 18 000 m^3 of air trapped was filled with water.

In conclusion - the JAIC in its report does not explain how the 'Estonia' hull was filled with water so that she sank. The writer has of course asked JAIC for 38 months how the 'Estonia' sank with water on the car deck in the superstructure, and the only answer has been, that it will be explained in the Final Report. But the Final Report does not explain how the 'Estonia' hull filled with water, so that she sank! How could >6 000 tons of water fill the car deck? How was the 18 000 m^3 of air trapped below the car deck in 14 watertight compartments of the hull lost, so the 'Estonia' sank? The Final report does not say.

To back up its unreal sinking scenario the Commission adds computer-generated pictures in figures FR13.3-5. While the 'Herald of Free Enterprise' capsized in 2 minutes with at least 500 tons of water on the car deck, the 'Estonia' takes 25 minutes to list 115°. According to all established stability theory the 'Estonia' should have turned upside down with about only 1 500 tons of water on the car deck considering the bad weather and then floated upside down with the keel three meters above the waterline. The Final Report does not say who made the computer pictures and how? It is interesting (and easy!) to visualize the water inside the garage of the superstructure. 400 tons of water forms an average 1 meter high and 5.6 m wide wedge at the side of the sloping deck (at about 10-15° heel) with leverage 10 m, disregarding trim [4.18]. 1 000 tons of water forms an average 2.24 m high and 6.15 m wide wedge at the side (and should have heeled the vessel 20-30°. When this water trims the ship on the stern, the wedge becomes higher and wider aft. 2 000 tons of water forms an average 4.3 meter high and 6.4 m wide water wedge - see figure 2.16.1D and should tip the vessel upside down. If the vessel is prevented from tipping upside down, this water trims the ship on the stern and the water will touch the underside of deck 4 aft on the starboard side. 6 000 tons of water on the car deck sloping 65° does not form a wedge on the car deck anymore, as the water is trapped by the car deck, the ship's side and the underside of deck no. 4! The car deck is wet for average 7.8 m from the side and the underside of no. 4 deck is wet for about 5.4 m from the side, disregarding trim - the whole side of the garage is full of water from bow to stern average width 6.6 m at mid-height, but only 35% of the car deck is wet, because the heel is 65°. Half the starboard side and the whole port side is dry and above the water. **The condition with 6 000 tons of water on the car deck is 100% unstable and the 'Estonia' should turn upside down in seconds.** The JAIC says it is a stable condition! How can the JAIC state that the 'Estonia' is stable with 6 000 tons of water in the garage at 01.30 hrs, when it is not physically possible?

4.22 PERSONAL REFLECTIONS

Why do I care about all above? I have nothing to do with the 'Estonia'. I do not know any survivors or relatives. I have not lived in Sweden since 1970. It is clear to me that the whole Commission does not know anything about stability or how ships sink. Should I care about that? Nobody else seems to care! I care about seamen and passengers. The North European shipping industry and the IMO are very silent about the whole thing. I have learnt about ro-ro passenger ships in the Red Sea and East Med since 1980. But the rules are the same. And the stability theory is the same. I find it amazing that the JAIC dares to publish completely false stability calculations and then, based on these false calculations, which show that the 'Estonia' could not capsize, when she should capsize, alleges that the 'Estonia' sinks, when she could not sink. The Final Report is quite a clever document because it mixes false and correct calculations, allegations and testimonies and it is very difficult to follow the report. Such reports cannot be used by, e.g. the IMO, when changing their rules. The IMO and serious maritime administrations can evidently not accept the JAIC Final Report, so it will be interesting to see what happens. A new investigation is required.

Note February 2004 - The writer is now convinced that the Swedish Navy removed the visor of the 'Estonia' below water using explosives and by pulling it off the wreck one week after the accident - to enable the JAIC to blame the accident on the visor.

4.23 FAILURE SEQUENCE OF BOW VISOR AND RAMP

In section FR13.5 JAIC explains the failures of the visor and the ramp. It is said that the visor attachments were insufficient to withstand 7-9 MN wave load - 900 tons! In Chapter FR12 the maximum load was 3.6 MN [4.17], now it has doubled. Such loads cannot possibly be periodic wave loads, so they must be transient impact loads, the energy of which can be very small. It is not the force that causes damage, it is the energy. The (potential) energy was too small to lift or flip the visor up on the focsle deck for example. Nowhere in the whole Final Report is the energy calculated, which was required to destroy the visor attachments [3.7]. It is difficult to visualize a 9 MN (900 tons) wave impact load on the visor. These loads were reportedly measured in model tests (http://heiwaco.tripod.com/eapp2.htm), and considering scale effects, must still have been quite spectacular. It is a pity there is no photo in the Final Report of such an impact! The visor side is at 45° to the waterline, so it is not easy to slam it into the water, so that there is an impact [2.15]. If such high impact pressures are applied to the visor side, so that the vertical component is 900 tons, you wonder what the horizontal component was or the pressures had been on the flat bottom of the ship itself, when it slammed into the waves. To me it seems logical to assume that any crew would have slowed down the ship or changed course before such high impact loads started to damage the bow (and the visor). The Final Report does not discuss why the crew never considered slowing down.

It is said that all visor attachments failed under tension, which is obvious. However, the remaining explanations how the bottom lock, the side locks, the hinges and the hydraulic lifting cylinders were ripped off are not convincing. Then the deck beam (bulkheads) at fr. 159 was cut through and the visor fell forward and rested on the ramp, [3.10 and 3.11].

The Final Report says

> *'Probably (sic) in one single moment, the visor pulled the ramp forward so that its locking devices and hydraulic actuators failed'.*

Probably? The weight of the visor was 55 tons. The visor was alleged to be resting on the fore peak deck and was tilting forward, but it was kept back by the ramp and the lifting pistons resting against the bulkhead at frame 159. The horizontal contact load at the top of the ramp was probably only 10 tons - 0.1 MN. See figure 3.10. According to FR15.8 the upper limit of the load carrying capability of one hook was 0.2 MN (The writer thinks it is much higher!) and of one side securing bolt was 0.2-0.3 MN. There were two hooks and four side securing bolts. How could a force by the visor of 0.1MN at the top of the ramp destroy two hooks and four side securing bolts?

The JAIC says that the six locking devices failed sequentially, but there is no proof for that either. Instead the JAIC says that

> *'A force applied to the top of the ramp from contact with the* visor (0.1 MN as shown above - writer's note) *had larger leverage* (yes - the vertical leverage to the car deck is 6 m - writer's note) *than the locking devices had* (yes, the two hooks had leverage 4 m and the two upper side bolts about 3 m and the two lower side bolts about 1.0 m vertical leverage - writer's note), *reducing the force actually required to break the devices'.*

Simple calculation is that the moment of the contact force was 0.6 MNm. The retaining moment of one hook was 0.8 MNm, i.e. **one hook only should have been able to retain the ramp in position**. The total retaining moment of two hooks and four bolts is 3.2 MNm>0.6MNm of the visor acting on the ramp.

And then we have not included the wires/chains and the hydraulic actuators, which also retain the ramp.

The conclusion is very simple - the visor could never have pulled open the ramp.

But how was the ramp pulled open?

The only question that needs to be answered is, if the ramp was pulled open at all [1.24.6]. It is very possible, that the ramp was closed, when the ship sank (on the bow), when one trailer rolled forward and hit the ramp from inside and pushed it open a little bit. There is no indication, that the ramp has been pulled open 90° before the accident and then closed back to only <10° opening after the accident. Many witnesses say that they saw that the visor was missing, when the ship sank, but nobody in the water saw the ramp sticking out from the bow opening when the ship sank.

Note August 2000 - it would appear that the ramp was not locked at all but held back by some temporary arrangement with ropes. **Note January 2001** - evidently the ramp was not pulled open at all as the visor was still attached to the ship when it sank.

It is very important to note that not one person in the engine control room (ECR) (FR6.2.3, FR 6.2.4 and FR 6.2.5) says that he saw the ramp 90° open. The third engineer watched the monitor several times and never saw the ramp open. The systems engineer entered the ECR after the listing had occurred and therefore, when the ramp should have been open, but he says that the ramp was partly open (see figure FR 6.1) but said later that maybe it was not true - he did not observe any water entering the car deck - the third engineer had told him that there was water on the car deck!! The motorman entered the ECR after the sudden list had occurred. He saw big waves on the car deck and that the water surface was level with the cars and does not mention the ramp. At this time the systems engineer arrived (who saw no water at all on the monitor).

The testimonies are very confusing, but one thing is certain - nobody in the ECR ever stated that the ramp was 90° open, even when they later were in the water [4.7]. The systems engineer is honest and says that he saw no water at all on the car deck and that the third engineer had told him to say the contrary. The third engineer probably also told the motorman to say that there was water on the car deck. Nobody told the systems engineer and the motorman that the ramp was open, so they did not say that. The third engineer has according to an Estonian friend of mine disappeared from Estonia and cannot be questioned further. But maybe he has found employment on another ship abroad.

The problem is not the crew in the engine room. The problem is the JAIC, which already on October 4, 1994 [1.4] announced that water on the car deck had sunk the 'Estonia' (before the ramp had been inspected). The JAIC thought that a partially open ramp - as seen on the wreck - was sufficient to sink the 'Estonia' and said so in its first reports [1.11.4]. Later it concluded that more water was necessary, so the ramp had to open up more and had to close later [1.11.5]. Later the JAIC probably realized that the ramp had never been opened and that water on the car deck could not sink the 'Estonia' at all and there was panic inside JAIC. Stenström promised the Commission that he was able to write a convincing report. However, Stenström died and JAIC gave up - as seen from the Final Report there is no proof whatsoever that water on the car deck sank the 'Estonia'.

All the alleged noises of the separation of the visor are also summarized In FR13.2.5. Then it is said that these observations are described in detail in Chapter FR6. However, neither the ‘observations’ in FR13.2.5 nor the 'details' in Chapter FR6 support the allegations in FR13.2.5 (compare 3.7-3.11 and 4.17).

4.24 THE FINDINGS

The Final Report summarizes its findings in Chapter 20. The findings do not include:-

- **that there was water on decks 0 and 1 before 01.00 hrs [2.2 and 3.18],**

· that the 'Estonia' listed suddenly 50° to starboard at about 01.02 hrs and then came back to equilibrium at circa 15° starboard list [3.16],

· that the damages on the visor attachments indicate that the visor was stricken off sideways [4.10],

· that there is no proof that the bow ramp was more open than found down at the wreck [4.23],

· that the 'Estonia' should have turned upside down with circa 1 500 tons of water on the car deck in the superstructure and should have floated upside down, [2.16 and 5.5] on the air-filled hull,

· that the 'Estonia' did not turn upside down (13),

· that the 'Estonia' had 14 watertight compartments in the hull below the car deck, which contained 18 000 m^3 of trapped air, when the ship was listing >30°, and could not sink [4.21],

· that no ro-ro passenger ship type 'Estonia' has ever sunk due to water on the car deck in the superstructure, i.e. that this was the first time ever this type of alleged accident happened (a little water on a deck above waterline sinking a whole ship). Note that the 'Herald of Free Enterprise' [4.16] never sank! Ro-ro ships have sunk due to water on the ro-ro deck, but those ships had very small freeboard, i.e. the ro-ro deck was close to the waterline and damage stability did not permit carriage of passengers.

4.25 IMPROVED SAFETY AFTER THE ACCIDENT

The Final Report includes a description of modified safety rules (Chapter 19) and conclusions and recommendations (Chapters 21 and 22).

The modified safety rules are explained in the next chapter - 5.1-5.17.

What can you say about the conclusions? 'The 'Estonia' capsized due to large amounts of water entering the car deck in the superstructure, loss of stability and subsequent flooding of the accommodation decks'.

All observations are that the 'Estonia' never capsized. She was stable all the time after the accident with an increasing angle of heel. She was undoubtedly sinking due to a leak in the hull below the waterline. The no. 1 accommodation deck was no doubt flooded by a leak on deck 0 and through open watertight doors. Finally no. 1 deck filled up and water spilled out on the car deck. The flooding of all other accommodation decks inside a non-watertight and non-weather tight *deck house* had no influence whatsoever on the sinking, as the *deck house* never contributed to the buoyancy in the first place. The ship was evidently floating on the *hull*. To sink the *hull* must be filled with water. But the JAIC could not explain how the *hull* was filled with water.

The most important conclusion of the JAIC has no foundation at all and is wrong.

The recommendations do not include a recommendation for leak alarm in un-attended compartments below waterline and a recommendation that watertight doors close automatically when water is flowing through them.

My opinion is that the Final Report does not contribute to better safety at sea at all. The nine members and the many experts responsible for it should be ashamed.

CHAPTER 5. HOW THE SAFETY WAS REDUCED!

5.1 INTERNATIONAL WORK FOR IMPROVED SAFETY

The 'Estonia' accident in September 1994, when 852 people died including 501 Swedes, was not only a human disaster. It was also a rule making disaster for the Marine Safety Committee (MSC) of the IMO, that had developed the safety rules used to build the 'Estonia' (The 'Estonia' ex 'Wasa Link, 'Viking Sally' was not built 100% according to the SOLAS. She was only certified for *'coastal trading'*: **the watertight door system**, http://heiwaco.tripod.com/epunkt123.htm and the **lifesaving equipment**, http://heiwaco.tripod.com/epunkt133.htm did not comply with the SOLAS among other defects). MSC decided quickly to review and to amend the SOLAS rules after the accident, but everything seems to have gone wrong as many amendments do not improve safety. The joint Estonian-Finnish-Swedish accident investigation Commission had quickly concluded mid-October 1994 [1.11] that the bow visor had fallen off the 'Estonia' en route to Stockholm. Then the visor pulled open the forward inner ramp, water flooded the main ro-ro deck, and the ship lost stability and sank, and this MSC simply accepted as fact. MSC was not supposed to investigate accidents - MSC was supposed to develop better safety rules. In December 1994 the Commission stated [1.15] that the cause of the accident was that the visor locks' design and manufacture were incorrect and that the locks had been too weak to withstand the wave forces (but that you apparently could not blame the Administration, responsible for approving the locks, for it, or the shipyard that made the locks). Nobody at the IMO and MSC queried the statements. If the alleged cause of accident was correct, the solution was very easy - stronger visor locks!

There were numerous reasons why the Commission did not publish the Final Report (13) quickly apart from the possibility that the members and experts of the Commission were not qualified to carry out the investigation or that instructions were given for political or other reasons not to find the true cause of the accident.

The first reason was stability! The Commission suggested that the ship moved forward (at 15 knots!) with the bow ramp/visor in the *superstructure* fully open, as the visor had fallen off and pulled open the ramp. Each time the ship dipped the bow into a wave, it scooped up water into the *superstructure*, where the water was trapped. It was then (or should have been) easy to show, http://heiwaco.tripod.com/epunkt19.htm that, with more and more water trapped on the main ro-ro deck in the *superstructure*, the vessel would list about 34°, where it capsizes and tips and floats upside down on the undamaged hull. With 600 tons of water trapped between and inside the sides of the garage and its sloping deck in the *superstructure* the list should have been 12°, and with 1 200 tons the list should have been 23°. With about 2 000 tons of water the 'Estonia' should have listed about 34°, but then the righting lever GZ would have been zero and the 'Estonia' would have capsized within minutes, turned upside down and floated with the keel up. Many stability experts doubt that 'Estonia' sank due to water trapped in the garage, as 'Estonia' did not capsize and did not float upside down. The Commission could not present any stability calculations. It referred to **an Estonian officer** http://heiwaco.tripod.com/epunkt148.htm who said that the car deck was filled with water and that the ship listed on the side and sank. When the Final Report was published in December 1997 it did not contain any calculations showing how the hull of the 'Estonia' was filled with water and how she sank.

A second reason was strength of material. Nobody witnessed when and how the visor locks were broken. **Divers**, http://heiwaco.tripod.com/epunkt116.htm only recovered the **Atlantic**, http://heiwaco.tripod.com/epunkt37.htm (bottom) lock visor and hull lugs after the accident - the damaged side locks were left at the bottom of the sea. The Atlantic lock lug was bent to starboard and its connection to the visor was buckled on starboard side and fractured on the port side as seen on photo 10.5 in the Part Report (9) of the Commission, April 1995. All these damages suggested that the lock failed when the visor was struck off the ship sideways [4.10] that is after the ship had started to list. Another most embarrassing fact was that the Commission had not established the actual condition of the locks just before the accident, viz. wear and tear and any modifications. There was no proof that the Atlantic lock failed due to design and manufacture faults first in a long sequence of events

leading to water being trapped on the ro-ro deck and the vessel sinking. The IMO and MSC never asked any questions about this.

A third reason was the locations of the visor and the wreck. The **visor**, http://heiwaco.tripod.com/epunkt14.htm was found 1 570 m West of the **wreck** [1.13] and the Commission could not show how this was possible based on its suggested sequence of events. According to the Commission the 'Estonia' turned port 180° after she had lost the visor and while the garage was filling up with water and the ship was listing to starboard 90°. At the same time the port rudder and propeller came above waterline, the engines stopped, etc. All these events were very unlikely, as, stated above; the 'Estonia' should have turned upside down after having heeled 34°. It was more probable that the vessel must have turned to port (against the wind) before it lost the visor, that is the ship was not en route to Sweden when the visor was lost, and this was not part of the original accident scenario. It was under these strange circumstances that the IMO and its Marine Safety Committee were going to amend the rules.

5.2 EXISTING SAFETY RULES - SOLAS REGULATIONS II-1/23-2

A final reason why the Commission had difficulties to publish its Final Report was that it could not explain how the existing SOLAS safety rules failed to prevent the accident, that is why the alleged entry of water into the garage was not detected. That such water should not enter the ro-ro deck in the first place or should be detected was ensured by SOLAS safety regulations II-1/23-2 - door lock alarms, leak detection, remote supervision of doors and the garage itself, manual patrol, etc. These rules were introduced after the 'Herald of Free Enterprise' accident in 1987 [4.16]. Formal Safety Assessment (FSA) shows that it is very unlikely that all requirements of reg. II-1/23-2 fail simultaneously, so it should not have been possible that water was trapped on the car deck without being noticed. The Commission has never made any comments about this.

You did not have to be very clever to suggest that **all the allegations of the Commission were false**, http://heiwaco.tripod.com/epunkt45.htm, but this the IMO and its Marine Safety Commission did not dare to say in 1994 and 1995. The reason the Commission gave incorrect information is unclear. The Commission was maybe under political pressure to say that 'Estonia' sank and just made up a story about water in the garage. In August 1996 the Commission told Swedish news agency TT, http://heiwaco.tripod.com/epunkt21.htm that the ideas in this book (which the writer had published in a newspaper) were unintelligent gibberish based on unscientific methods by an unreasonable person! Such rhetoric is usual in Sweden when you do not want to discuss. What the writer had suggested was that the 'Estonia' sank because she sprang a leak below the waterline in the hull. It is then easy to understand why the IMO and its Marine Safety Commission did not dare to question any suggestions by the Commission - the Commission would just have stated that the IMO and the MSC were unintelligent bodies.

5.3 THE IMO MARINE SAFETY COMMITTEE - THE PANEL OF EXPERTS

The Marine Safety Committee (MSC) of the IMO, or more correctly, it's Steering Committee on Ro-Ro Ferry Safety, therefore appointed in December 1994 a Panel of Experts to propose amendments to SOLAS in view of the 'Estonia' accident. The Panel consisted of, it was said, 21 independent experts from the important shipping nations. Most of the independent experts were civil servants and were employed by only twelve administrations. **Few had any idea about ro-ro passenger ship stability.** The Panel was requested to make a *thorough* review of all safety aspects of ro-ro passenger ships and to suggest amendments to SOLAS to prevent another 'Estonia' accident.

The Panel of Experts without hesitation accepted the allegations by the Estonia Commission, viz. 'Estonia' had sunk because the visor locks were bad, water was trapped on the main ro-ro deck in the superstructure, the ship lost stability and sank. They never asked for any evidence as everything was secret.

http://www.nmsc.gov.au/Fastcraft/18_concl.pdf

"IMO started its work in December 1994, but had little concrete information on the Estonia casualty to guide its work. The preliminary report of the Joint Accident Investigation Commission (JAIC) of Estonia, Finland and Sweden1 was not available until April 1995, by which time many of the Panel's recommendations has been finalised and were in the process of being submitted to the MSC. The final report was not published until December 1997 - five months after some of the new SOLAS regulations had entered into force.

Some years later the report of the JAIC has been held to be self-contradictory and alleged correspondence with one of the commissioners is quoted as supporting a sequence of events that is inconsistent with the information that was available to the IMO."

The result of the Panel's review was ready in March and April 1995, that is the Panel made its work in three months. The proposals of the Panel of Experts were discussed at a diplomatic conference of the MSC in June 1995 and were later adopted by MSC in November 1995. **The work was done extremely quickly!** No technical discussion of the suggestions by neither the subcommittees of the IMO nor the NGO's of the shipping industry was possible. The shipping industry had no chance whatsoever to discuss or comment upon the Panel of Expert's suggestions. The IACS and all the Classification societies agreed to all the amendments without comments.

The Panel proposed about thirty amendments to SOLAS, which were quickly adopted and which were entering into force starting 1 July 1997. The references to SOLAS here refer to the Consolidated Edition, 1997.

5.4 SHELL DOOR STRENGTH - SOLAS REGULATIONS II-1/18 AND 20

It was very strange that, even if the Commission stated that the cause of the 'Estonia' accident was bad visor locks design and manufacture, SOLAS regulations II-1/18 and 20 about visor lock strength were not modified except reg. 20.4, where a reference to res. A.793 (19) was made. This resolution says that visor locks shall be examined by the IACS unified requirements S8 and S16.

You wonder if the IMO Panel of Experts ever evaluated the 'Estonia' visor locks according to UR S8 and S16 to confirm that (a) the original design of the locks was too weak (as stated by the Commission), and (b), that the visor locks of 'Estonia' would have been reinforced properly not to cause the accident, if UR S8 and S16 had been applied correctly? The Estonia Commission never examined the locks as per UR S8 and S16.

It is in fact very easy to check the visor locks designs from the drawings. My opinion is that the design was according to UR S8 and S16. The lock manufacture is difficult to check, but it is important to note that the shipyard maintains that the locks were manufactured according to the drawings. Independent experts suggest that the locks had been modified later, e.g. the strength had been reduced. The Commission did not even bother to rescue the side locks from the wreck to see how they were manufactured!!

5.5 STABILITY - SOLAS REGULATIONS II-1/8, 8-1 AND 8-2

The IMO Panel of Experts should of course have confirmed what happened to the 'Estonia's stability, if there were water trapped inside the *superstructure* on the ro-ro deck above an undamaged, watertight *hull*, i.e. that

the vessel lost stability (how?) and finally, that the vessel sank (why?). SOLAS has requirements only for damage stability where the *hull* below the waterline is penetrated. The objective is to prevent the vessel from excessive heeling and sinking.

It seems that the Panel of Experts never understood that a Ro-Ro passenger ship like the 'Estonia', with the main ro-ro (bulkhead) deck 2,5 meter above the waterline does not sink, when water was trapped on the ro-ro deck inside the superstructure! **This is basic intact stability** http://heiwaco.tripod.com/epunkt216.htm**. The underwater hull is undamaged and any extra water or cargo in the superstructure is only 'loaded' on the side of the ro-ro deck and the ship heels until it turns upside down (and floats on the hull - capsize).**

In figure 5.5 (below) is shown the assumed GZ (j) curves for the 'Estonia' at displacements, D, 11 000, 11 600, 12 200 and 13 000 tons (j = angle of heel). Water on a ro-ro (bulkhead) deck inside the superstructure is an **intact stability** matter (as the underwater hull is undamaged) - you only 'load' extra cargo (water!) on the side of the ro-ro deck in the *superstructure*. The only unusual thing is that the displacement (D), draft (d), angle of heel (j), etc. increase, when water is loaded (trapped) on the side of the ro-ro deck in the superstructure.

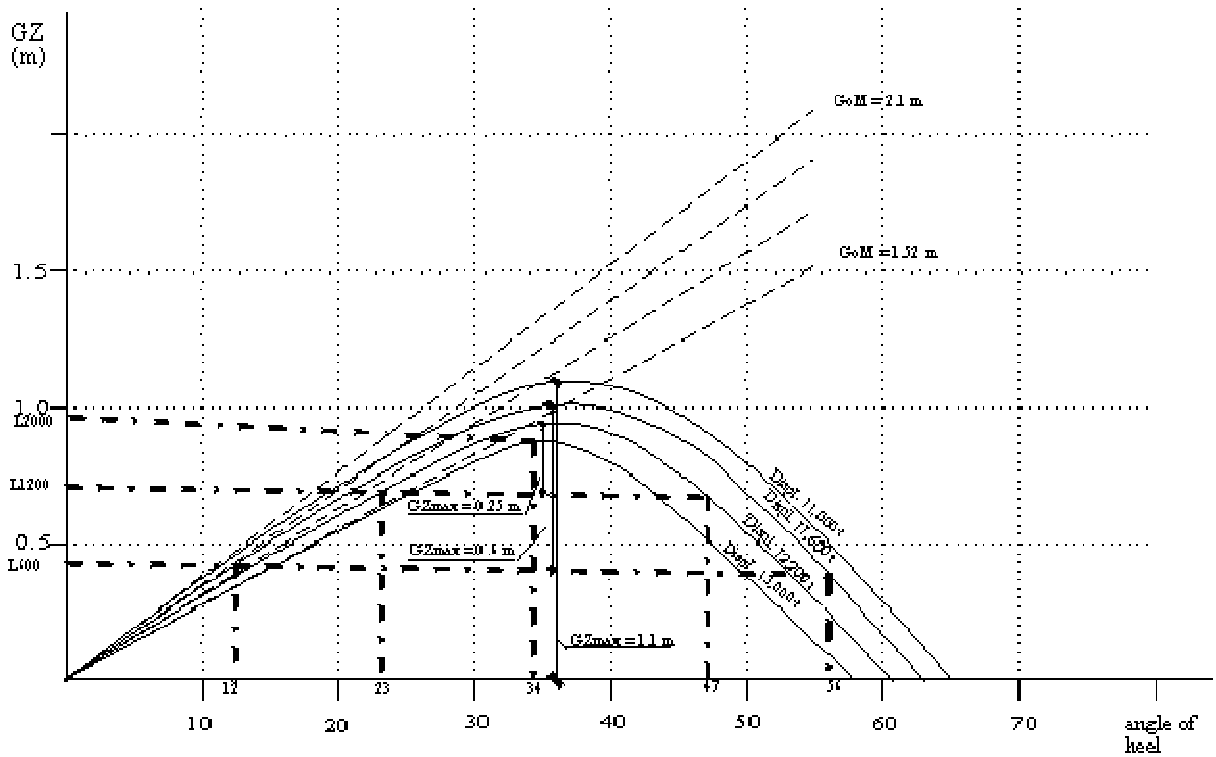

Fig. 5.5 - M.V. 'ESTONIA' Assumed GZ curves for displacements 11,000 - 13,000 tonnes

With no water in the superstructure, Displ =11 000 t, the stability was very good, for example GZmax was about 1,1 meter and the range of positive GZ was 65°. Intact stability GoM was 2,1 m.

Note 4 July 2000 - GoM was in fact less - 1,17 m - but it only means that the GZ curve is slightly modified in the first 0-10°, as the GZ curve depends mostly on the shape of the weather tight superstructure above the watertight hull, so the following discussion is still correct.

GZ is reduced, when the heel angle j>30°, as then the (non weather tight) *deckhouse* decks above the garage (= the weather tight superstructure) are being flooded.

With 600 tons of water in the superstructure, Displ = 11 600 t, the permanent angle of heel was about 12° and the positive GZ range was reduced to 56°-12° = 44° and actual GZmax was about 0,6 m. The extra cargo reduces GoM to 1,92 m.

See note above - correct reduced GoM should be about 0.9 m.

Righting lever L600 (0,45 m) is the heeling moment of 600 t of water in the superstructure divided by the displacement (11 600 t). When the vessel heels 12° the water on car deck forms a wedge at the starboard side of the superstructure, which is trapped by the sides of the superstructure and the sloping deck. No water flows down into the hull and compartments on deck 1, as there are no openings in the boundaries of the wedge.

With 1 200 tons of water in the superstructure, D = 12 200 t, the permanent angle of heel was about 23° and the positive GZ range was reduced to 47°-23°=24° and actual GZmax was about 0,25 m, that is the stability had worsened a lot. GoM would be 1.73 m.

See note above - correct reduced GoM should be about 0.8 m. At this condition the vessel had stopped and you would expect all water to flow out by itself = the vessel would upright and never sink.

Righting lever L1200 (0,73 m) is the heeling moment of 1 200 t of water in the superstructure and the weight of solid, shifting cargo divided by the displacement (12 200 t). No water could flow down into the hull and compartments below, as the access openings - stairwells at the centreline - were in a dry position!

With about 2 000 tons of water in the superstructure, Displ = 13 000 t, the permanent angle of heel was about 34° and the range of positive GZ was reduced to 0° and actual GZmax was also about 0 m, that is there was no residual stability left and the vessel should turn up side down to a new stable condition at j = 180° in a few seconds. The deck house decks started to flood at 30° heel. Then the vessel should float upside down as the underwater hull was undamaged and the 'Estonia' had not lost any buoyancy or floatability. The total volume of the intact hull was 18 000 m3.

Note that with 2000 tons of fixed, extra cargo in the superstructure the stability would still have been very good - GoM 1,52 m with a wide range of 58° of positive GZ. It is only because all extra 'cargo' (the water) is shifted to the side of the ferry and that the stability range and GZ become zero, that the ship tips upside down.

See note above - correct GoM should be about 0.65 m.

Any water in the superstructure also trims the vessel, either on the stern or on the bow. However, trimming does not prevent the vessel from heeling, and with about 2 000 tons of water in the superstructure the 'Estonia' should have turned turtle. **As the 'Estonia' did not turn upside down, there could not have been any water on the car deck!** The combined motions of heel and trim locate the lowest position of the car deck at the stern side or the bow side and all water would build up from the garage corner aft or forward. The water wedge would therefore touch the garage ceiling/deck head (deck 4) at the stern or bow for a long distance aft or forward, if there were any water on the car deck inside the superstructure. Trimming increases the heeling moment. If there ever were, say 60 cms, of water on the flat car deck of the 'Estonia', the 'Estonia' would have trimmed and heeled so much that all that water would have flowed to one corner of the garage in the superstructure, where the water would have touched the deck head 5-6 meters above the car deck. The ship should have capsized and floated upside down.

It is clear the IMO Panel of Experts never evaluated the stability of the 'Estonia' or, e.g. any other similar ship with water trapped on the ro-ro deck in the superstructure and what would happen if sufficient heeling moment due to trapped water and shifting cargo is applied, that is that the ship then always tips upside down and later floats upside down on the hull. The Commission has stated that the inner ramp in the superstructure of the 'Estonia' was pulled wide open at 01.15 hrs as witnessed by an Estonian officer and that >2 000 tons of water entered the garage within a few minutes, also witnessed by the officer. But the Commission never explained why the 'Estonia' did not turn upside down with that water trapped on the ro-ro deck in the superstructure. Instead the Commission suggested that the 'Estonia' turned very slowly on the side, 70° list at 01.35 hrs, and then very slowly sank at 01.55 hrs.

It should be clear that the IMO Panel of experts only accepted the Commissions suggestion that water on the ro-ro deck in the superstructure and shifting cargo caused the vessel slowly to heel over on the side and then caused the vessel slowly to sink, without checking itself what would happen. What kind of 'experts' was that?

The 'Estonia' was reported by **many survivors** http://heiwaco.tripod.com/epunkt21.htm to have suddenly listed first 50° and then back to upright and then to 15° starboard at 01.02 hrs (13 minutes earlier than when the officer saw water in the garage!). Then she slowly heeled over on the side at 01.35 hrs and sank at 01.55 hrs. Survivors noticed water on deck no. 1 below the bulkhead deck already at 00.50 hrs and that the watertight doors in the bulkheads were open. These observations cannot exclude the possibility that the 'Estonia' sprang a leak, water spread through open watertight doors on deck no. 1 (**Note August 2000** - correction - the water probably spread through open watertight doors on deck no. 0), the vessel listed suddenly due to free surfaces in the hull, more water leaked in and the vessel listed more, until it was on the side and then sank. This is a classic sinking - not a capsize! In such a scenario the visor should have been struck off the ship after the first list occurred. The Commission apparently never informed the IMO all the details of the accident according to IMO resolutions A.440 (XI) and A.637 (16).

You wonder if the IMO Panel of Experts ever considered that a Ro-Ro passenger ship can sink due to a leak below waterline in the hull, when the watertight doors below the bulkhead deck are open. **Did the Panel ask the Commission for full details of the 'Estonia' accident according to res. A.440 (XI) before starting reviewing the SOLAS? Why did the Panel of Experts not ask the Commission, why it kept its investigation secret, while res. A.637(16) says that it shall be kept in public?**

By checking all the new amendments to SOLAS it seems very little new rules have been made to prevent water being trapped on the ro-ro (bulkhead deck). The amendments on the other hand seem to assume that the existing safety rules to detect and to prevent water on the bulkhead deck (e.g. SOLAS II-1/23-2) in the *superstructure* have failed in the past and will fail in the future, and that additional requirements are necessary, to prevent things to happen that should not have happened in the first place, as no water should ever enter on the bulkhead deck in the *superstructure*.

You wonder if it is logical to assume that certain safety rules fail and then to back up these rules with additional safety rules? You wonder what the risk (probability) is that water is trapped undetected in a ro-ro space in the superstructure protected according to SOLAS. The Panel never estimated the risk. If it is zero, you do not need more rules!

Addendum 4 January 2001 - The Swedish National Maritime Administration has in a letter dated 15 December 2000 confirmed that when calculating damage (and intact) stability you cannot include the buoyancy of a non-weather tight or non-watertight deck house in the calculations of righting arms GZ, i.e. the above calculations are correct. But - it adds that in the case of the 'Estonia' there was buoyancy in the deck house which (a) prevented capsizing and (b) which permitted the vessel to float on the deck house for more than 20 minutes. However - where the buoyancy - >7 000 m^3 of air - was located inside the deck house, it cannot say - the space must of course be welded absolutely watertight and no such space exists in any deck house.

5.6 OPENINGS IN WATERTIGHT BULKHEADS IN PASSENGER SHIPS - SOLAS REGULATIONS II-1/15

Even if it was possible that the 'Estonia' sank because the watertight doors in the hull below the bulkhead deck were open, the Panel of Experts generally had no comments about the rules for watertight doors. Nevertheless the rules were edited.

The regulations II-1/15.1 to 12 were made to apply only to ships constructed on or after 1 February 1992 (sic), even if it is strangely said that para. 6.5 applies to ships constructed before that date. Nobody has been able to explain this anomaly in the rules.

Previously reg. 15.14 stated clearly that all watertight doors shall be kept closed during navigation. Now new regs. 15.6.5 and 15.9.3 permits that watertight doors may be open at sea.

Because the 'Estonia' probably sank because the watertight doors were open, you wonder why SOLAS now is relaxed about the requirement that watertight doors shall be closed at sea.

The writer finds it strange that SOLAS does not simply require, that sliding watertight doors on any ship need only be closed automatically, when water flows through them, e.g. over the sill. This can easily be arranged by a floater that activates the door closing button!

5.7 CONSTRUCTION OF WATERTIGHT DECKS ... SOLAS REGULATIONS II-1/19.2 AND 3

The Panel of Experts added two new paragraphs to regulation II-1/19. None of the requirements made any sense at all.

The Panel of Experts assumed incorrectly that the bulkhead deck (of any ship) is a watertight deck and required in para. 2 that,

> *'where a ventilation trunk passing through a structure penetrates the bulkhead deck, the trunk shall be capable of withstanding the water pressure that may be present within the trunk, after having taken into account the maximum heel angle allowable during intermediate stages of flooding, in accordance with regulation 8.5'.*

As the bulkhead deck (very often inside at superstructure) first of all needs not be watertight (it or a deck above it needs only be weather tight - SOLAS II-1/20.2), and second, as the bulkhead deck is always assumed to be damaged in regulation II-1/8.4.3, it means that this amendment to SOLAS is nonsense. No Classification Society or Administration has managed to explain to me what reg. II-1/19.2 is all about. **Why fit a watertight trunk in a deck that need not be watertight?**

The only deck that needs to be watertight on a ship is a deck that forms a step in a watertight bulkhead or which is part of a tank. The 'Estonia' did not sink because a ventilation trunk was not capable of withstanding water in it.

The paragraph 2 is also very badly written. Instead of writing

> *'after having taken into account the maximum heel angle allowable during intermediate stages of flooding, in accordance with regulation 8.5 '*

the Panel of Experts could have said 'at 15° heel' angle' that is specified in reg. 8.5. But why should you make a trunk (in a non-watertight deck) watertight at 15° heel, if the vessel never heels 15° during intermediate stages of flooding, when damaged?

In paragraph 3 the Panel of Experts continues the confusion by requesting that

> *' where all or part of the penetration of the bulkhead deck is on the main ro-ro deck, the trunk shall be capable of withstanding impact pressure due to internal water motion (sloshing) of water trapped on the ro-ro deck'.*

Para. 3 introduces the concept *'main ro-ro deck'* without defining it. Ro-ro cargo spaces, open ro-ro cargo spaces and closed cargo ro-ro spaces are newly defined in the next part 2 of SOLAS; regulation II-2/3.14,15 and 16. It is assumed here that the main ro-ro deck is the first deck of a closed ro-ro space above waterline, most probably the bulkhead deck. Such deck need not be watertight - it shall normally only be fire insulated to A-0 standard and be weather tight if in the open. The *'main ro-ro deck'* is evidently above waterline. No water shall be trapped on it in the first place; it either drains out through scuppers (fitted to drain the deck in case of fire) or through simple freeing ports.

Assuming that para. 3 shall be read together with para. 2 it is required that a ventilation trunk penetrating a ro-ro deck (which is the bulkhead deck) shall be reinforced to withstand sloshing of water trapped on the deck. This regulation is clear evidence that the Panel of Experts did not understand that 20-40 cms of water trapped inside a closed cargo ro-ro space above the waterline heels and trims a normally loaded ship*, while the water forms a wedge at the side/end of the space, and that sloshing is never a problem. (* A 'normally loaded ship' is in this case a ship with the centre of gravity above the first ro-ro deck above waterline). 20 - 40 cms of water on a sloping ro-ro deck below the cars cannot slosh! It drains out!

Actually, it could be beneficial, if water trapped on a ro-ro deck damages a ventilation trunk. Then the water will escape from the ro-ro deck down into the hull and the heel (but not the trim) of the ship will be reduced. But 'Estonia' did not sink because something was damaged due to sloshing on the car deck. The Commission never asked its divers to inspect the car deck!

The rule could also be read to be about all or part of a penetration of the bulkhead deck, which is on the main ro-ro deck. One such penetration is evidently also the stairwell and its enclosure (trunk). Then it says that this trunk shall be capable of withstanding impact pressure due to internal water motion (sloshing) of water trapped on the ro-ro deck.

Water trapped on a ro-ro deck in the superstructure immediately heels and trims the vessel as shown above. A certain amount of water on the ro-ro deck tips the ro-ro ship upside down (when the range of positive righting arm GZ and GZ itself becomes 0). As water trapped on the ro-ro deck heels and trims the ship, there is hardly time for sloshing to develop on a sloping deck. However, if sloshing develops and breaks a trunk, it will be good, as the water will flow out of the ro-ro deck and down to a shorter compartment below, so the stability improves!

You wonder why a trunk on a main ro-ro deck shall be capable of withstanding impact pressure, etc.? Would it not be better to arrange the trunk around the penetration, so that it permits the water to flow down below the main ro-ro deck, so that the ro-ro deck is drained and dried?

5.8 WATERTIGHT INTEGRITY FROM THE RO-RO DECK (BULKHEAD DECK) TO SPACES BELOW - SOLAS REGULATION II-1/20-2

The confusion continues with the introduction of Regulation 20-2 about ro-ro deck.

It must be recalled that ro-ro deck is not defined in SOLAS II-1. Here the ro-ro deck is the bulkhead deck and it is assumed in the regulation that it is watertight, even if it is not required anywhere by SOLAS. For the discussion here it is assumed that the ro-ro (bulkhead) deck is the first deck of a closed ro-ro space above waterline.

The regulation then requires that all accesses that lead to spaces below the watertight bulkhead (ro-ro?) deck shall have a lowest point that is not less than 2,5 m above the bulkhead deck, etc.

You wonder what the background of this regulation is. When the vessel is damaged, then the bulkhead deck is also damaged according to regulation II-1/8.4.3, so it does not matter how the access from above to below the bulkhead deck is arranged. The bulkhead deck is of course above the damaged waterline after flooding and so are all the accesses in the deck.

The regulation naturally is about water trapped on the ro-ro deck and clearly the Panel of Experts believed that water trapped on the ro-ro deck would or should not flow down to spaces below through the doors, so therefore the doors had to be moved up 2,5 meters. Actually the Commission had told the Panel of Experts that water flowed down from the garage to the spaces below in the centreline stairwell, when the 'Estonia' was listing, which apparently the Panel of Experts accepted as fact. Of course, when the 'Estonia' was listing the stairwell openings were at least one meter above any water trapped on the sloping garage deck in the superstructure and water could hardly flow down to spaces in the hull below. The water was trapped elsewhere - on the sloping deck!

So again the Panel of Experts was wrong! Water trapped on the deck of a closed cargo ro-ro space in the superstructure above the waterline heels and trims the ship, while the water forms a wedge at the side/end of the closed space. In the 'Estonia' case 1 200 tons of water should heel the ship 23° and the water would form a 2,7 meter high wedge trapped at the side by the sloping deck (assuming still water). The Panel of Experts did not realize that that water on the car deck in the superstructure will trim and heel the ship, so that the water touches the deck head maybe 4-5 meters above the ro-ro deck in the garage corners. If the accesses that lead to a short space below the bulkhead deck were located in the side or at the corner at deck level, all the water could flow down through the access openings to the short space below and stabilize the ship. If the space below was an un-attended service space nobody would drown in that space. Accesses to passenger spaces below the bulkhead deck should always be located at the centreline. As water trapped on the ro-ro deck always heels and trims the ship, accesses in the centre line is generally in a dry position and need not be 2,5 meter above the deck! Accesses in the outside corners of the car deck are always submerged with sufficient water on the car deck.

All the requirements of Regulation 20-2 are nonsense! Furthermore, if the access opening is not protected, any water on the long main ro-ro deck can flow down to the shorter compartment below! This is very good as it makes the ship more stable (more weight in a short compartment below the ro-ro deck) and it makes the ship heeling less (as the heeling moment of the water on the ro-ro deck is reduced). **By preventing water on the ro-ro deck in the superstructure to flow down to the deck below in the hull, you accelerate the possibility of capsize!! It seems that the requirement proposed by the Panel of Experts actually makes the ship more unsafe.**

5.9 CLOSURE OF BULKHEADS ON RO-RO DECK - SOLAS REGULATION II-1/20-4

The Panel of Experts added this completely nonsensical regulation.

SOLAS (II-2/3.14) defines a ro-ro cargo space (deck) as a space (deck) not normally subdivided in any way, while regulation II-1/20-4 requires that all subdivisions (?) on the ro-ro deck (space) shall be in place (sic!) and secured (sic) before the ship leaves berth. Such a space (deck) cannot be a ro-ro space (deck - not defined)!

This regulation is apparently what remains of a requirement that ro-ro cargo spaces should have been subdivided by portable divisions.

5.10 BILGE PUMPING ARRANGEMENTS - SOLAS REGULATION II-1/21

The 'Estonia' probably sank because she sprang a leak below waterline in an un-attended service space on the inner bottom and nobody observed it until water flowed out on deck 1, where passengers were accommodated. The water inflow was probably 1-2 m3/s, so the bilge system could not have coped with the leak. However, the writer finds it strange that this regulation does not require alarms in un-attended spaces, when the bilges are filling up. If there had been such a bilge alarm on the 'Estonia', the crew could have closed the watertight doors and the ship had been saved. The alarm could have been arranged to automatically close watertight doors (and to start bilge pumps).

You wonder, based on above, why the Panel of Experts did not require bilge alarms in un-attended spaces below waterline on, e.g. passenger ships or ro-ro passenger ships or ships with watertight doors, etc. It was in fact discussed as part of an integrated damage control management system, but the whole idea was dumped.

5.11 ESCAPE ROUTES ON RO-RO PASSENGER SHIPS - SOLAS REGULATION II-2/28-1

This regulation, which was amended by the Panel of Experts, is about escape routes on Ro-Ro passenger ships, i.e. not on normal passenger ships. Walls of escape routes (corridors) shall be reinforced so that you can walk on the wall. (Addendum January 2001 - this is a totally stupid requirement. Any passenger ship is not stable at about >30° list and nobody will ever walk on a wall in an accident. Even if the ship ends up on the side on a sand bank - as 'Herald of Free Enterprise ' nobody could get out and walk on the escape route walls!). Handrails have to be fitted everywhere in the escape routes on the decks, etc.! It seems these requirements have been written assuming that the ship is heeling a lot, when passengers shall escape, i.e. the Panel of Expert still thinks that water trapped on the main ro-ro deck in the superstructure heels the ship until it is 70-90° on the side - and is stable.

However, the regulation does not mention anything about what happens to the escape route, when it comes to a stairwell! If the stair is transverse (sideways), it is a death trap, when the ship is heeling, i.e. you cannot get up (the stair is a vertical wall). Even if the stair is longitudinal (fore and aft) it normally has a landing halfway and you have to turn 90° to get up, so even such a stair is a death trap (you have to climb as a monkey to get up, and this is not a normal escape).

Simple FSA shows that it is impossible to design a stairwell that is a safe escape route, when the vessel is heeling!! Simple FSA also shows that a 16 m² landing (reg. II-2/28.1.5.5) is a death trap when the vessel is listing, as it is not possible to reach the stairs from the adjacent corridor over such a large landing!

You wonder why the Panel of Experts decided to 'improve' part of the escape routes only on ro-ro passenger ships with handrails and reinforced walls in the corridors, etc., when it is not possible to ensure that the stairwells function as escape routes, when the vessel is listing?

In my view it is stupid and dangerous to regulate that 90% of an escape route is 'safe' with the ship listing (the corridor), while the remaining 10% of the escape route (the stairwell) is a death trap. It is probably a fact that many persons were trapped inside the stairwells of the 'Estonia'. The modified escape rules would not have changed that.

5.12 DISCHARGES - SOLAS REGULATION II-2/37.2.1.2

The ro-ro deck scuppers are sized to discharge water from the water-drenching system. The scuppers cannot drain the ro-ro deck, if water enters through, for example a wide open shell door in the bow - the inflow is too large (e.g. the Herald of Free Enterprise, 1987). In spite of these facts the Panel of Experts decided that all scupper valves on Ro-Ro passenger ships shall be open at sea.

You wonder why is it not permitted to allow the ro-ro deck scuppers to continue to discharge to a collection tank, fitted with level alarm, to avoid the risk of pollution?

Evidently you can always open the deck scuppers to drain a ro-ro deck to sea at any time, but discharge will take time. The scuppers are only sized to drain the deck in case of fire.

The Panel of Experts or IMO/MSC did not discover the inconsistency of this rule with previous rules. The Panel thought that the ro-ro deck was watertight and now demanded that scuppers in a watertight (sic!) deck should be open. How can a deck be watertight if it has scuppers in it? And why should a deck inside a ship above waterline be watertight when the outside weather deck only need be weather tight?

5.13 LIFE RAFTS - SOLAS REGULATIONS III/24-1.2

Regulation III/24-1.2 was added by the Panel of Experts. According to reg. III/24.1.2, for example, a ro-ro passenger ship and a normal short international voyage passenger ship with LSA for 2 000 persons both carries 600 persons in lifeboats (30%) and 1 400 persons in life rafts (70%) (56 life rafts à 25 persons) served by 10 launching devices - five each side. In addition each ship carries life rafts for 500 persons (25%) (20 life rafts à 25 persons) which are served by the existing (10) launching devices. The launching devices are specified in III/48.6.

The new regulation, III/24-1.2 Life rafts, requires that the life rafts on a ro-ro passenger ship shall be different from those on a passenger ship. Also the launching arrangement may differ. No explanation is given and no FSA was done to support the amendments.

Note August 2000 - it should be noted that the 'Estonia' 1994 had only life boats and life rafts under davits for about 45% of the certified number of 2 188 persons aboard. 55% of the persons aboard were supposed to jump into the water and swim ashore or to life rafts which had been thrown into the water. This 'wet' evacuation system had been approved by the Swedish, Finnish and Estonian maritime administrations 1980-1994 with no regard to the fact that, e.g. the water temperature in the Baltic is <10°C for 9-10 months of the year killing anyone in the water in a short time. It cannot be excluded that one reason for falsifying the Final Report was to hide this simple fact. It is also surprising that this stupid defect was never detected at an evacuation test or trial by owners, crews and administrations for 14 years. Finally - how could you write an evacuation procedure plan knowing that 55% of the persons aboard had to jump into the water?

5.14 FAST RESCUE BOATS - SOLAS REGULATIONS III/24-1.3

The Panel of Experts decided that all ro-ro passenger ships shall be equipped with a fast rescue boat in 1998 http://heiwaco.tripod.com/epunkt321.htm. Normal passenger ships need not be equipped with a fast rescue boat. 'Slow' rescue boats on normal passenger ships need not be replaced.

The Panel of Experts gave no reasons from risk and safety aspect (FSA) why a ro-ro passenger ship, but not a normal passenger ship, must have a fast rescue boat?

The only difference between a 'slow' and fast rescue boat is that the latter can do 20 knots during 4 hours using a petrol engine and can capsize in heavy weather and therefore need two specially trained crews aboard the

mother ship. A fast rescue boat is also intended to be launched and retrieved under severe adverse weather, and apparently requires a special launching appliance.

A 'slow' diesel driven rescue boat is often also a lifeboat. A fast rescue boat cannot be regarded as a lifeboat. As you lose LSA capacity by replacing a 'slow' rescue boat by a fast one, the difference shall be made up by life rafts.

According res. A.656 (16) a fast rescue boat is of value in certain circumstances for the rescue, in particular, of persons involved in offshore operations. Offshore installations are often immobile or anchored so a fast rescue boat makes sense to pick up someone who has fallen into the water as you cannot move the offshore unit.

It is not clear whether a fast rescue boat is of better use on a ro-ro passenger ship than a slow rescue boat, and particularly, if a replacement is cost effective and increases the safety. If someone falls off a ro-ro passenger ship (or a passenger ship) you turn of course the ship itself around and return to the person in the water - it then does not matter if the rescue boat is slow or fast!

What it means in practice is that every existing ro-ro passenger ship will replace an existing combined lifeboat/slow rescue boat with a fast rescue boat and that crew has to be trained. A typical ro-ro passenger ship company with six ships must buy six new fast rescue boats and fit them, take off six good 'slow' rescue boats and replace the missing LSA capacity with life rafts, and train about 100 crew members to handle the boats. This may cost US$ 500 000:- and the safety aboard has not changed the least! The only one who benefits is the manufacturer of fast rescue boats. (See also note 4 July 2000 at the end).

5.15 MEANS OF RESCUE - SOLAS REGULATION III/24-1.4

The Panel of Experts decided and this rule requires that every ro-ro passenger ship - but not a passenger or cargo ship - shall be retrofitted with efficient means for rapidly recovering survivors from the water and transferring survivors from rescue units or survival craft to the ship in 1998.

SOLAS does not define 'efficient means for rapidly recovering survivors from the water' and 'efficient means for transferring survivors from rescue units or survival craft to the ship' or 'survivors' and 'rescue units'.

Normal passenger ships and any other ships need not be equipped with efficient means for recovering survivors, etc. When the IMO for the first time in its history mandates that ships shall be outfitted with safety means not for the ship itself but for the benefit of other ships, it excludes or exempts most ships from the requirements! The Panel of Experts gave no reason from safety aspect (FSA), why a ro-ro passenger ship, but not a normal passenger ship or any other ship, must have efficient means for recovering survivors in the water, etc.

The Panel of Experts did not bother to define what is an efficient means for rapidly recovering survivors from the water. Is a (fast) rescue boat an efficient means for rapidly recovering survivors? (If so, it is already specified!)

What is an efficient means for rapidly transferring survivors from rescue units to the ship? Is it a lifeboat ladder over the side? Nets down the side? A crane? What is a rescue unit? The Panel of Experts did not say. The way the regulation is written nobody knows what it is all about and how to implement it (and why?) uniformly.

As a designer of ro-ro passenger ships the writer finds it very strange that these ships shall now suddenly be re-designed as 'rescue' ships. As an operator of ro-ro passenger ships the writer does not know how the crew shall suddenly be prepared to recover survivors from the water! Smaller cargo ships are probably much better at

picking up survivors from the water. The regulation probably assumes that a fleet of ro-ro passenger ships is operating on a certain route and if one ship is in danger the other ships will assist. Evidently the regulation has no effect on a ship operating alone on one route.

5.16 ANNEX 5, RESOLUTIONS ..... 29 NOVEMBER 1995. RESOLUTION 14 REGIONAL AGREEMENT ON SPECIFIC STABILITY REQUIREMENTS FOR RO-RO PASSENGER SHIPS. ANNEX

The Panel of Experts tried to introduce changes to SOLAS about subdivision of ro-ro ships (above the bulkhead deck http://heiwaco.tripod.com/epunkt"21.htm). However, MSC did not accept it. This resolution and annex are what remains of that effort. They say that ro-ro passenger ships, which comply fully with reg. II-1/8, shall also take into account a hypothetical volume of water on the first deck above waterline.

Reg. II-1/8 assumes that the ship is damaged in collision. The vertical extent of damage is without limit. The ship floods compartments and floats with the ro-ro deck above the intact waterline still above the damaged waterline.

As long as the striking ship is locked into the stricken ship, little water can flood the ro-ro deck due to movements of the stricken ship. When the two ships are separated, the stricken ship will of course position itself with the damage not facing the oncoming waves. The passengers will also be asked to move to the undamaged side of the ship, and the ship will be ballasted, so that the ro-ro deck on the damaged side is heeled up, i.e. the residual freeboard on the damaged side becomes 2 m or more. Then no water can enter the damaged ro-ro deck. Following the above procedure the requirements of resolution 14 does not add to the safety of the ship.

Note August 2000 - the regulation assumes that the damaged ship rolls in the waves and scoops up water on the ro-ro deck according to a theoretical formula. However, the regulation permits that model tests are done as an alternative to verify the amount of water that may flow in through a hole in the side and end up on top of the ro-ro deck, which is above the damaged still water line. Model tests show that less water is scooped up as suggested by the theoretical formula, i.e. the formula is wrong. For more info http://heiwaco.tripod.com/epunkt321.htm.

The Panel of Experts could not name any ro-ro passenger ships that have been sunk due to the ro-ro deck having been flooded after the ship had been involved in a collision, i.e. when reg. II-1/8 stability was not providing sufficient safety and when the requirements of resolution 14 would have saved the ship(s).

Resolution 14 was rejected by a majority of the major shipping countries including countries with many ro-ro passenger ships. Resolution 14 is a way to force owners to fit partitions on the ro-ro deck based on the assumption that the 'Estonia' sank with water on the ro-ro deck, even if resolution 14 assumes that the ship is damaged in the side and two compartments below the ro-ro deck are flooded (and initially not the ro-ro deck). It has only been adopted by countries in Northern Europe for political reasons.

You wonder, if water trapped on a ro-ro deck is such a risk, why didn't the Panel of Experts require subdivision of the ro-ro deck as a safety means in the first place? The answer is that the Panel tried but a majority of MSC members rejected the idea.

5.17 THE WORK OF THE PANEL OF EXPERTS

The 'Estonia' accident should have been treated with more respect by the IMO Panel of Experts. No official reports of the accident investigation had been published when the Panel of Experts was working. Nobody

knew what happened with certainty. It should have been clear to the IMO that JAIC was not working according to IMO resolutions A. 440 (11) and A.637 (16) and was maybe misleading the public and the IMO itself. Disregarding all this, IMO and MSC introduced quickly, very quickly, amendments to SOLAS stating that these amendments improved the safety. But was that the case? Nobody had the guts to ask the question at the time.

None of the SOLAS amendments presented in this chapter and which were proposed by the Panel of Experts and quickly approved by MSC would have prevented the 'Estonia' accident. Haste makes waste. It does not matter if it was water on the car deck as suggested by the Commission or if it was a leak below the waterline, suggested by many survivors and me, that caused the accident - the new amendments would not have prevented the accident. It is very unlikely that water trapped on the ro-ro deck caused, e.g. the 'Estonia' accident, as a certain amount of water on such deck immediately tips the ship upside down and nobody survives! It is strange that the Panel of Experts assumed that existing rules to detect and prevent water entry on garage decks will not work, while new rules to detect and prevent water entry into spaces below the bulkhead deck were not required at all.

None of the suggested SOLAS amendments would have permitted more persons to escape from a sinking (ro-ro passenger) ship that is listing - the persons would still be trapped in the stairwells. Nobody expected the Panel of Experts to design a new, safe stairwell but the problem should have been pointed out - it may be possible to design a stairwell, where persons may escape at large angles of heel.

Some other amendments, some of which are not mentioned here, would permit more people to survive an 'Estonia' type accident, e.g. if the other ships on the route were equipped as 'rescue ships', etc. However, the question is if the requirements of these amendments are cost effective or realistic. How on earth re-design an existing ro-ro passenger ship as a 'rescue ship' to be equipped with efficient means for rapidly recovering survivors from the water and transferring survivors from rescue units or survival craft to the ship? Then you assume that all rules have failed on the other ship and that there are (many?) survivors in the water and that the ro-ro passenger ship in question comes and saves them. It is completely unrealistic. **It is better to concentrate on making the ship itself safer, e.g. by rules that closes watertight doors automatically, when the ship is leaking, which provides all spaces below bulkhead deck with water alarms, etc.**

Many of the amendments to SOLAS mentioned in this chapter are just stupid and can be ignored in practice e.g. II-1/19.2, 19.3, 20,2, 20.4, II-2/37.2.1.2, etc. They should be removed from SOLAS as they make SOLAS look stupid. But some amendments cost plenty of money to fulfil without adding to the safety, e.g. II-2/28-1, III/24-1.3 and 4 and they should be withdrawn from SOLAS as they are plain wrong. **The reason SOLAS is wrong today is that IMO/MSC did not follow their own rules that amendments should be checked by FSA and be discussed in subcommittees, etc.** Now the new rules introduce items that are not defined, assume that decks are watertight, when the rules do not require it, etc. and many other inconsistencies, which makes it difficult simply to discuss the rules with the administrations as nobody knows what you are talking about.

Classification societies have a big role to play here. They often include the SOLAS rules into their classification rules, i.e. stupid and unclear SOLAS rules are just copied into the class rules. But if a SOLAS rule is outright stupid, why should not the Classification society point this out to IMO? The class should refuse to put an unclear SOLAS rule into the class rules! Other NGO's are also to blame. Not one organization at IMO has had the courage to suggest that many 1995 SOLAS amendments were not very clever. Therefore many people believe in, e.g. conspiracies.

Writers note 4 July 2000 - all the above information in Chapter 5 has been given to numerous members of the IMO (national maritime administrations) already in February 1998 - but still in July 2000 no corrections to the SOLAS amendments have been proposed.

Actually not one administration bothered to reply (except Holland - it could do nothing).

Also the Italian MSC chairman (Pattofatto) told the writer personally, when we had one of the largest ferry companies in the Middle East ISM-approved 25 September 1997 that he could do nothing!

With regard to 5.14 new fast rescue boats are required from 1st July 2000 the following should be noted. Such a boat shall be able to pick up one (!) person in the water. These boats are required to be launched and retrieved in adverse weather conditions defined by the IMO as only Beaufort 6 with mean wave height only 3 m. How this shall be demonstrated has not yet been decided. Shall you bring the surveyor out in adverse weather, drop him/her into the sea and then pick him/her up with the rescue boat? Joke apart - even worse is that the new rescue boat is still not required be launched and retrieved in Beaufort 7 with mean wave height 4.2 m - the weather during the Estonia accident. So when the next Estonia accident happens in the Baltic, the new rescue boats cannot still be used!

Actually - it may be possible to launch all the big, heavy ordinary life boats on any ferry in Beaufort 6 (or 7) and mean wave height 3 (or 4.2) m and evidently these life boats can pick up 100's of persons in the water - thus the existing life boats are much better to pick up persons in the water than a new fast rescue boat. While the heavy life boat is stronger and protected by its skates when launched (when the ferry is rolling), the light weight fast rescue boat will swing like a pendulum, when the ship is rolling (in Beaufort 6) and be thrown against the ship's side when all crew aboard the fast rescue boat will fall overboard.

It should be recalled that not one of at least six assisting ferries at the Estonia accident launched any of its existing lifeboats to assist persons in the water. The writer fears that many persons will be hurt if you try to test launching and retrieving of existing fast rescue boats fitted in the side of the ferry in adverse weather conditions.

The writer has only tried it once and the whole test had to be abandoned for safety reasons. That the slow life boats cannot be retrieved in severe heavy weather does not matter - after having picked up the survivors in the water, the slow life boats remain in the water. Thus - a simple and more cost effective solution to pick up survivors in the water is to ensure that, say, two or more slow life boats on any ship can be launched (but not retrieved) in severe adverse weather - defined as Beaufort 8 - wave height 5 meters, so that they can pick up survivors in the water.

Writer's note 10 December 2000 - the above note has still not resulted in any response from the IMO or any shipping administrations.

Writer's notes 19 September 2001 - when practicing with newly fitted Fast Rescue Boats many crew members have been hurt, some fatally. It seems the IMO has then recommended its members when doing PSC not to check if the Fast Rescue Boat crews are practicing, i.e. the Fast Rescue Boats will not be used.

CHAPTER 6 CONSPIRACY AND OTHER THEORIES

6.1 CONSPIRACY

The accident investigation and the quick changes to SOLAS by the IMO were so badly performed, that it was certain that other theories of more sinister character would show up. Personally the writer has no faith in un-proven stories. The interested reader should read (12), which has well-written chapters about the criminal underworld (Mafia) in Estonia and Russia and what military or intelligence organizations in USA and Sweden could come up with. But it is very strange that the Commission refused for 38 month to investigate the hole in the side suggestion and that the Final report does not even mention it, and that the IMO never asked JAIC to comment upon the possibility that the 'Estonia' was leaking in the hull. It is also strange that efforts by victims of the accident to have the accident investigated by independent experts appointed by a French tribunal have been delayed and obstructed (12) by the French judge. It is also strange that Estonia, Finland and Sweden by law forbid diving to the wreck to secure evidence to clarify the accident. It is pathetic to propose that the wreck shall be covered in concrete - it is resting in deep mud, which cannot be covered by cement.

Note January 2000 - a picture of the wreck and visor http://heiwaco.tripod.com/visoronbottom.htm has been published. **Note April 2002** - The conspiracy seems to have included the whole Commission http://heiwaco.tripod.com/epunkt45.htm .

6.2 HOLE IN THE STARBOARD SIDE

A hole in the starboard side below waterline would explain the sinking. Water floods the damaged compartment, water spreads to adjacent compartments through open watertight doors and in an intermediate stage of flooding the initial stability (GoM) is zero and the vessel lists and rolls 50°, where the righting arm GZ is positive and brings the ship back to 15° list/equilibrium as observed aboard, even if the Final Report (13) does not mention it.

Many survivors heard sharp noises and experienced hard shocks that could have been associated with damage causing the hole in the side. Witnesses saw water on deck 1 before the sudden listing. The JAIC just concludes that all these noises came from the visor, but there is no proof whatsoever for that. Noise was heard on board and the survivors could not say what it was. The JAIC says the noise, beyond doubt [3.9], originated from the bow, but there is no proof whatsoever for this bold assumption. But where did the water come from?

Evidently the hole in the side need not be of criminal origin. Explosions occur aboard ships in tanks, pipes and enclosed spaces and explosions cause structural damage. Personally the writer believes as one possibility that there was an accidental explosion in, e.g. a sewage tank, a fuel tank or a collection tank of some sort. It is a very common cause of accidents at sea.

Note April 2002 - the 'holes' in the side can be seen in http://heiwaco.tripod.com/epunkt116.htm of the book **Disaster Investigation**. One suggestion is that the 'Estonia' was in quite poor condition, i.e. the hole - the leakage - could just have been caused by corrosion and bad maintenance. Or the sea inlet/outlet of the sewage tanks http://heiwaco.tripod.com/sewagetanks.htm came loose and flooded/sank the ship?

6.3 THE FELIX REPORT

In 1996 the writer happened to watch Spiegel TV that had a program about the Felix report. Most of the report was about organized crime in Estonia and Russia and had little to do with the ferry 'Estonia', until it was stated that the 'Estonia' had been used to smuggle various materials to Sweden. It was then suggested that the

Swedish customs were alerted and that the smugglers had ordered the Master of the 'Estonia' to open the visor, lower the ramp and to dump two lorries overboard, and that this action by the crew had caused the vessel to sink.

It is of course very easy to dismiss the Felix report. First you do not open visors and lower ramps at sea at full speed, especially not in bad weather. Second, it is very difficult to dump a lorry overboard over the ramp. How do you do that? The lorry must of course be parked just inside the ramp and as it is facing aft, you have to reverse the lorry out on the ramp. What do you do then? Release the hand brake and push the lorry over the ramp? The ship had stern trim! What happens if the lorry becomes stuck on the edge of the ramp?

Anyway, water on the car deck would never have sunk the 'Estonia', so for that simple reason the Felix report can be dismissed as propaganda.

Note April 2002 - but an open starboard pilot http://heiwaco.tripod.com/epunkt114.htm door may have contributed to the sinking! Then the whole superstructure didn't contribute to any stability.

6.4 BLACKMAIL

This theory is very simple, i.e. organized crime blackmailed the ship-owner Estline to pay protection money, so that everything worked smoothly at Tallinn. It is suggested that Estline had paid in the past (as most foreign companies doing business in Estonia at the time), but that Estline stopped paying, when the Estonian government got better organized and controlled the port of Tallinn. A time bomb was therefore installed aboard the 'Estonia' in the sauna area and it exploded and caused the hole in the side or bottom. It was planned as a warning but ended up in a disaster. This theory cannot be written off as JAIC never inspected the sauna. The Estonian government naturally preferred that bad visor design and water on the car deck caused the accident than Estonian criminals, and would therefore obstruct the investigation.

6.5 THE US CONNECTION

This theory is described by Dr. H. Witte in (12) and is shortly as follows. US military interests were in 1993 and 1994 illegally buying secret Russian military equipment still kept in Estonia and controlled by corrupt Russian military staff. In 1994 the Russian military was evacuating the military equipment back to Russia and certain equipment was either bought or stolen and quickly transported in two lorries or trailers and loaded on the 'Estonia', to get it out of reach of the Russians.

The Russians were of course aware of the US attempts to steal their equipment and had informers in, e.g. the port of Tallinn, which could have prevented the loading. However, in this particular case the Estonian authorities had sealed off the port [1.2] and ensured that the two vehicles could be loaded. It is unclear if the lorries were loaded first or last on the 'Estonia' and it does not matter, because the Russians were aware of what had happened.

The Russians probably asked that the two trucks were being unloaded, but the officers on the 'Estonia' refused. The ship therefore sailed on time or with a slight delay at 19.15 hrs. But the Russians did not give up. According to the theory they put a man aboard the 'Estonia' with at least three bombs with remote control and the man (with a wine red jacket) apparently positioned the bombs in the side and at the watertight bulkheads of the ship in the sauna department and threatened to blow up the ship (and himself?), unless it turned back to Tallinn and unloaded the lorries!! You wonder why the Russians did not simply inform the Swedish police at the other end that 'Estonia' was carrying stolen Russian equipment. It would have been very easy for the Russian

embassy at Stockholm to go down to the port and to make a scandal about the stolen equipment. However, the Swedish authorities had already been informed by the Americans that the equipment was on its way and the Swedes had apparently provided special road arrangements to quickly move the stolen equipment to another ship or aero plane for onward transport to the USA. This was apparently a joint Swedish-American effort to get secret weapons away from Russia.

Nevertheless, the whole thing got out of control and one or more bombs were exploded (at 00.40 and 00.58/9 hrs?) with the result that the vessel sank. Shots may also have been fired on the bridge, killing the Master. The relief Master and seven surviving crew members were later kidnapped and brought to the USA. The relief Master was rescued by a Swedish helicopter and the pilot told the media, that the relief master was saved. The relief master was first brought to a Finnish hospital, where he was duly registered. However, he was then taken away to and disappeared in Sweden. Other crew who knew about the smuggling and who survived were also not permitted to return to Estonia.

The accident was reported to, i.a. the Swedish Prime Minister Bildt very early in the morning of September 28, 1994. The strange accident investigation is then part of a disastrous cover-up. Interesting enough when the writer had put parts of this book on the Internet he received an e-mail from a commander in the US Coast Guard, who said that I was right on the money and that 'Estonia' sank due to a leak below waterline and that he had suggested the same thing to his superiors. No further action was taken by the superiors at USCG.

For the record the writer does not believe in Witte's story.

The reason the writer does not believe Witte's story is that he believes what watch keeping seaman Linde 1.22 told Dagens Nyheter after the accident and which JAIC ignores in its Final Report. There was a telephone call to the bridge about water on deck no. 1 about 00.45 hrs. Linde was told to go to deck no. 1, because passengers there had noted water on that deck. When Linde arrived at deck no. 4, passengers escaped from deck no. 1 and repeated to Linde that there was water on deck no. 1. Then the ship listed. The story is very simple and rings true. The journalist spoke to Linde in Estonian, so there could be no language mistakes. For some mysterious reason Linde was then told to change his story, so that it tallied with 3/E Treu's story about water on the car deck at 01.15 hrs. Linde does not mention any shooting on the bridge!

Note August 2000 - maybe the telephone call at 00.45 hrs was about the stabilizer fin foundation being damaged and that the relevant compartment on deck no. 0 had filled up with water and that this water had spilled out on deck no. 1 and had alerted the passengers. Why Linde was sent down is not clear - to confirm this strange event and to wake up the passengers? Why was not a General Alarm raised? Nevertheless, the Master must have arrived shortly afterwards on the bridge and maybe it was the Master that accidently opened the watertight doors, so that water spread and caused the loss of initial stability at 01.02 hrs? In 1999 and 2000 it has been established by this writer that the 'Estonia' had too many **watertight doors** http://heiwaco.tripod.com/epunkt123.htm in its subdivision bulkheads and that these doors could be remotely operated - opened - from the bridge, and that the remote door indication was very confusing - red light indicated a closed door!

Note January 2001 - during 1999 there were reports that explosive devices and damages caused by explosives had been seen on video films released by the Commission. The explosive devices were (a) on the port (now upper) deck house side of the ship (a package) and (b) fixed at the bow ramp (an orange box) on the superstructure. The damages caused by explosives were to steel structure both outside and inside the ramp of the superstructure. These damages cannot have sunk the ship.

Only the Finnish delegation of the Commission dared to comment upon these revelations. The explosive devices were harmless objects according to the Finns - a tarpaulin on the deck house side and part of a wooden pallet stuck between ramp and frame of the superstructure! The Finns could not find an explanation of the newly found damages to the steel structure of the superstructure. This writer now believes that the visor was partly attached to the wreck (its superstructure), when it was found on 30th September 1994 and that the visor was detached by Swedish divers 2-9 October 1994 using explosive devices incl. the orange box and that the visor then sank to the sea floor below the bow. The orange box should then be one un-exploded device left behind by mistake. The **damages** http://heiwaco.tripod.com/epunkt310.htm to steel structure caused by explosives outside and inside the ramp were apparently caused in an attempt to open the ramp, which is apparently stuck in the frame and could not be opened. That the structure at the ramp has been subject to an explosion has been confirmed by i.a. Materialprüfungsanstalt Brandenburg (Germany) by studying steel pieces removed from the wreck. It should be simple to repeat these tests of objects from the visor itself which today is at Södertälje, Sweden, in the hands of the National Marine History Museum, Stockholm.

The job to remove the visor was naturally made to support the false allegation that the visor had caused the accident. The suggestion that the devices were exploded on the ship before the accident/sinking is not possible because (a) a lost visor only would never have sunk the ship - the ramp would still be closed/jammed in its frame and (b) if anybody had succeeded to blow open or off the ramp - how? - about 1 500-2 000 tons of water inside the superstructure would have caused the ship to turn belly-up and it would have floated several days on the 18 000 cubic meters of air in the undamaged hull with the keel up.

Only a leak in the underwater hull in combination with open watertight doors could have sunk the ship as it was reported and observed then and duly noted by this writer. The crew no doubt observed the leakage but panicked and took no proper action. This - in combination with the fact that the 'Estonia' lacked regulatory lifesaving devices, http://heiwaco.tripod.com/epunkt133.htm for all persons aboard and that no proper emergency instructions existed and had never been tested - caused at least 852 persons death. The leakage was probably due to a badly installed stabilizer fin in February 1994 - 7 months before the accident. The open watertight doors were no doubt due to bad design, maintenance and operation instructions and they were never closed. The Final Report (13) does not describe or mention the watertight doors at all, except that it is stated - without proof - that the watertight doors were closed after (!) the abrupt listing (as required by a strange emergency instruction aboard). Who has ever heard about an instruction that you shall close the watertight doors after an accident? **Actually - everything that has been revealed since the accident Final Report was published supports the observations in this book published in January 1998.**

6.6 HOW TO ELIMINATE CONSPIRACY THEORIES - CHECK THE STABILITY

Conspiracy is fed by incompetent investigators. If Finland cannot explain what its military radar observers at Utö saw on their screens before the 'Estonia' sank, people wonder. Finnish ships in the vicinity plotted each other on their radars, but nobody observed the 'Estonia'. It is strange and should be explained. If you do not inspect, e.g. the garage, people will start wondering what was hidden in the garage. If you say that the ramp locks were ripped apart and that the ramp opened up, you have to show the damaged locks and you have to explain, how and why the ramp closed itself again on the wreck. If you do not do that, people will wonder why nobody saw the ramp open after the accident. If you invent a completely new stability theory and claim that a ship is stable when it should have capsized and that it sinks, when it is quite obvious that the ship cannot sink, people should ask why. The 'Estonia' accident investigation is a clear example of an incompetent commission and/or incomplete investigation. The matter is not improved by a silent shipping industry and a complacent IMO changing rules based on fairy tales.

The writer is amazed at the way the Commission handled the stability calculations of each phase of the accident. There is proof in the Commission's diary kept by the Swedish Accident Investigation Board (SHK) that no stability calculations were done at all for 30 months. Then, when the writer started to make noise that the stability calculations were missing and that 'Estonia' could not have sunk with water on the car deck but should have tipped upside down, expert Dr Michael Huss (Sweden) and member Tuomo Karppinen (Finland) produced two stability documents (14 and 15) both proving me right, i.e. that the 'Estonia' has GZ<0 with 2 000 tons of water on the car deck (for any angle of heel). Figure 2.3 of (14) and figure 4.8 of (15) both shows that GZ <-1.5 meter at 70° heel with 2 000 tons of water on the car deck. In spite of this the JAIC apparently decided to ignore its own member's and expert's calculations and publish the Final Report. It is quite sad.

The only solution is to arrange a new diving survey to check the sauna compartment for damages and to make a better survey of the forward ramp and to have a new investigation made by competent people based on correct stability calculations.

Note August 2000 - a private dive survey is planned for end of August 2000 by the American citizen Mr. Gregg Bemis. Maybe Bemis equipment and divers will confirm that the starboard stabilizer fin foundation is damaged and that the hull is also damaged, which will confirm the analysis of the accident in this book.

Note December 2000 - the Bemis dive survey neither examined the whole underwater hull nor the starboard stabilizer fin box in any detail. The expedition lacked the means for such an undertaking. Bemis tried instead to locate an opening in the superstructure forward but found the relevant area covered by a sand heap (?). Bemis also took some steel samples from the bow area (in way of the ramp locks). Later examinations by independent laboratories indicate that these samples have been subject to material changes due to explosive devices.

Note February 2001 - in the autumn 2000 the Swedish government asked i.a. the JAIC and the Swedish Maritime Administration if the findings of the author (as given in this book) were sufficient to require further investigations into the accident. They all replied no - none of the observations was of any interest. The accident had taken place exactly as determined by the JAIC 1994-1997. However - four other institutions - two universities, one model test basin and the Swedish Board of Psychological Defence, http://heiwaco.tripod.com/epunkt149.htm suggested that the observations of the author needed to be clarified by a new investigation. The government has since delayed its decision about a new investigation.

CHAPTER 7. REFERENCES

(1) Press Release, Foreign Ministry of Estonia, October 10, 1994, 17.00 hrs.

(2) Press Release, Foreign Ministry of Estonia, October 10, 1994, 17.30 hrs.

(3) Notes by 'Gg' at Polishuset, Åbo, September 29, 1994.

(4) Second Interim Report of the Commission, Tallinn, October 17, 1994.

(5) Press Release by the Commission (un-signed), Stockholm, December 15, 1994.

(6) Letter from Swedish Accident Investigation Board, SHK, to Royal Institute of Technology, Stockholm, dated December 19, 1994.

(7) Letter to Swedish Accident investigation Board, SHK, from VTT, Finland, dated November 29, 1994.

(8) Stern Magazine, Germany, 18/1996.

(9) Part Report of the Commission, Stockholm, April 1995.

(10) Jörle/Hellberg, 'Katastrofkurs' ISBN 91- 27-05715-1.

(11) The German Group of Experts report. Hamburg 19.11.97

(12) Sänktes M/S Estonia? av Henning Witte, http://home6.swipnet.se/~w-65714/ , Stockholm 20.11.97

(13) Final Report Estonia, Edita ltd, Helsinki, Finland 3.12.97

(14) Simulation of the capsize - Floating condition and stability. Internal report by Dr. Michael Huss, Stockholm 1997 for the Swedish Accident Investigation Board (SHK).

(15) Technical Report Valc177 by T. Karppinen, Helsinki 1997 for the JAIC.

APPENDIX - OBSERVATIONS OF FIGURE 10.5 OF THE PART REPORT, APRIL 1995, AND A DESCRIPTION HOW THE VISOR SEPARATED FROM THE 'ESTONIA'

Figure 10.5 of the part report (9) refers. The figure has been turned upside down for simpler understanding (as the JAIC published the picture upside down) and is shown below. It shows the Atlantic lock visor lug from port. The observer is where the hydraulic cylinder of the locking bolt was situated on the fore peak deck below the ramp. The undamaged visor lug was previously connected to the intact lower horizontal web of the visor.

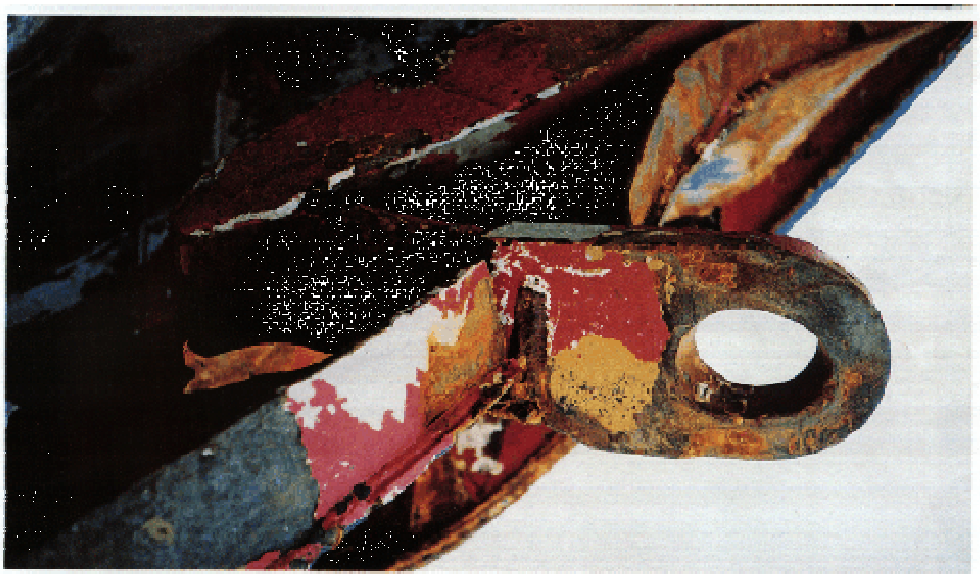

FIG 10.5
Visiere ora for
bottenlaset

The damaged lug is bent 15-20° to starboard and is twisted say 5-8° around itself - lower part to port, upper part to starboard. The starboard face flat on the horizontal lowermost web is buckled - to aft at the lug and forward further to starboard, i.e. the starboard web plate itself is buckled, but is still welded to the lug. The port face flat on the web is fractured in the welding to the lug (and the lug is pushed down (or the web plate up) ca 10-15 mm). The port web plate has also fractured (you can see the opening on the photo above behind the port face flat) and the lug itself is probably fractured where it is welded to the web plate. The web plate is also fractured at a distance beside on the port side and forward of the lug.

The damages can be explained by an impact load from starboard (when 'Estonia' hits the wave surface at >34° list). The lug is pushed against the bolt housing on port side and the lug is bent to starboard, and the starboard web plate and face flat are buckled, and the port web plate and face flat are fractured. The visor rotates against the ship, when the other connections are ripped apart, which explains the other damages on the lug and its connection to the web. It should be clear that the damages are not a result of a tensile force pulling the visor out from the hull as proposed by the JAIC one day before finding the visor [1.7]. Then the lug eye would have pulled open (the weakest part of the whole lock assembly). The JAIC suggested already 4 October 1994 that the lock had been pulled open (as the fore peak deck assembly on the wreck appeared damaged - the above damages on the visor itself were not even known or analyzed until the visor was salvaged mid-November 1994. The drawings of the lock assembly were not available for study by the JAIC in October 1994.

Addendum 7 July 2000.

Another picture of the bent lug is fig. 14 from Supplement no. 511 of the Final Report (13) shown below:

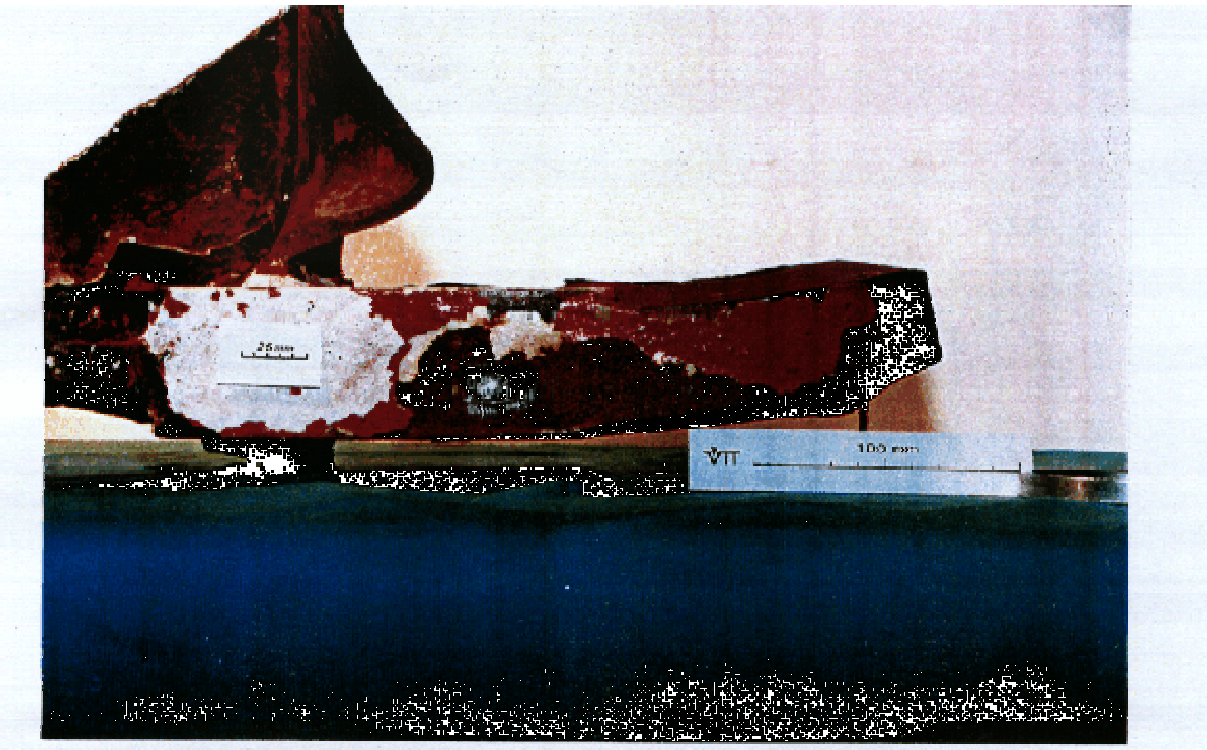

Figure 14. Top view of Atlantic lock visor lug after removal from visor. Lug aft end bent to starboard, bending of stem is very small and practically undetectable.

It is clear that the lug is still welded to the buckled starboard side face flat of the bottom web plate, which is also buckled. Supplement no. 511 notes that: "*The aft end of the lug is bent to starboard and the surrounding base plating of the visor has fractured on port and has buckled at starboard. This suggests that a fairly high starboard facing load in the bottom part of the visor has acted sometimes and apparently during the accident. Such a situation could have developed if a clockwise twisting rotation around the ships longitudinal axis of the visor occurred due to lifting action at the port side. Contact marks in the bottom locating horn recess on starboard suggest that the lower portion of the visor has been forced to port at some stage of the sequence of events. The resulting and remaining total sideways displacement of the aft end of the lug is on the order of 10 cm.*"

The Final Report (13) does of course not explain this finding in Supplement no. 511. This writer agrees in principle that 'a fairly high starboard facing load in the bottom part has acted ... during (sic!) the accident'. **But was it during the accident?** And where did this load come from? The writer of the Supplement (Rahka) thinks that the load has 'developed if a clockwise rotation around the ships longitudinal axis of the visor occurred due to lifting action at the port side'. This can evidently not be correct: 'lifting action' at the port side, when the bottom lock is still intact with the bolt attached and when the side locks and the upper deck hinges are also intact, will be transmitted to the hull via the locks and the rotation is prevented by the locating horns.

The writer of Supplement no. 511 (Klaus Rahka) believes that the total deformation of the visor bottom lug took place in two phases. Phase 1 - the lug was stretched out by a pulling force, when the fore peak assembly was still intact, and Phase 2 - the lug was bent 'when the bending action by the locking bolt occurred after the fore peak deck side of the lock had broken'. This is not convincing either - if the fore peak assembly is broken in Phase 1, there is nothing against which the lug can bend because the locking bolt is not held by the fore peak assembly. But the writer of Supplement insists: "The bending (of the lug) has apparently occurred so that the locking bolt has been supported by the starboard bow end corner of the eye hole and the stern end port side corner has been pushed aft and to starboard by the bolt, the port end of the bolt having been held back by the hydraulic piston rod. This deformation can be produced with a comparatively low force ...". This confusing explanation cannot be correct.

Actually the locking bolt was connected to the hydraulic piston rod by another bolted connection which cannot transmit any bending moment - the connection was flexible.

The riddle would be easy to resolve if the bottom locking bolt itself is available but it was thrown away. It was reportedly undamaged and not worn at all, so it could hardly have crushed the lug eye hole edges (corners).

And - it was not only the lug that was bent to starboard - the lug connection ('the surrounding base') to the lower web was both fractured (port side) and bent/buckled (starboard side) and this cannot possibly have been done by the 'locking bolt having been held back by the hydraulic piston rod'. To bend the 60 mm thick lug flat bar is of course quite easy, but to buckle the starboard web plate and face flat and to fracture the port web plate and face flat requires much more energy. Where did this force (energy) from starboard side come from?

Interestingly enough the German Final report issued in June 2000 suggests that the visor was 'attached' to the ship when it sank on the stern and listing to starboard >90° The upper deck hinges were apparently broken before then and the visor was held back by the lifting hydraulics which in turn were held back by the deck beam at fr. 159 (which apparently was not cut through). When a starboard facing load then acted (upwards!) on the visor bending the bottom lug and buckled and fractured the base is not clear to this writer (unless it was an impact load when the visor side was parallel to the water surface, but then the speed of the ship was small and high impacts on the visor were unlikely).

Maybe the bottom lug had been bent before the accident, e.g. by the ferry/visor colliding with a jetty, and the fore peak assembly was ripped off then? Then the lug was bent and its connection to the web was buckled and fractured. Then it was of course not possible to use the bottom lock at all, but you did not really need it at sea. The visor was held in place by the side locks and the deck hinges.

It is interesting to note that the Final report (13) does not prove that the bottom lock was undamaged before the accident and does not describe its condition before the accident. It is only assumed that the condition was good and that the lock was undamaged. But the Germans show convincingly that the visor condition was bad and that the visor had been dislocated to starboard and forward - nothing fitted. There are thus still many mysteries to resolve about the 'Estonia'. Maybe the mystery is very simple - the visor bottom lock was in fact damaged and un-usable before the accident (due to a minor collision with something which had pushed the visor to starboard) and the bottom lock could not be engaged at sea. The visor then fell off by itself when the ship sank.

Addendum 9 September 2000

When the Royal Institute of Technology (Stockholm) investigated the damaged visor lock parts - particularly the welding of the bolt housing to the lugs - it said (Supplement no. 517 of the Final Report): *"The general impression of the fracture surfaces was that they were more heavily corroded than those on the lock lugs. This lead to the initial thought that that this crack might have been present before the shipwreck. However ... it seems inconceivable that such a crack could have passed unobserved when a significant part of the housing insert weld must in that case also have been failed".*

The Commission naturally never investigated the lock condition prior to the accident. It assumed that the lock was OK. But if the lock was damaged and fractured prior to the accident, and if nothing was done about it in spite of being observed, it explains clearly why some parts were more corroded than others.

Legal disclaimer - even if this book was written in 1997 the writer states today that the purpose of the book and other information on this website collected 1997-2000 is not to cause or permit any other person to do any of the activities mentioned in para 3.(1)(a), (b) and (c) of the United Kingdom 1999 No. 856 MERCHANT SHIPPING The Protection of Wrecks (M/S Estonia) Order 1999 as quoted below:

Made 17th March 1999

Laid before Parliament 26th March 1999

Coming into force 12th May 1999

The Secretary of State for the Environment, Transport and the Regions, in exercise of the powers conferred by section 24(1) and (2) of the Merchant Shipping and Maritime Security Act 1997[1], and of all other powers enabling him in that behalf, hereby makes the following Order:

1. - (1) This Order may be cited as the Protection of Wrecks (M/S Estonia) Order 1999. (2) This Order shall come into force on 12th May 1999.

2. For the purposes of this Order "the protected area" means the area delineated by geodesics joining in sequence the following points -

59° 23.500'N, 21° 40.000'E;

59° 23.500'N, 21° 42.000'E;

59° 22.500'N, 21° 42.000'E;

59° 22.500'N, 21° 40.000'E[2].

3. - (1) A person shall not do any of the following, or cause or permit any other person to do any of the following, in the protected area:

(a) tamper with, damage or remove any part of a vessel lying wrecked on or in the sea bed, or any object or body in or formerly contained in such vessel;

(b) carry out diving or salvage operations directed to the exploration of any wreck or to removing any object or body from it or from the sea bed; or

(c) use equipment constructed or adapted for any purpose of diving or salvage operations.

(2) Any contravention of paragraph (1) above shall be an offence punishable on summary conviction by a fine not exceeding the statutory maximum or on conviction on indictment by a fine.

Signed by authority of the Secretary of State for the Environment, Transport and the Regions.

Glenda Jackson

Parliamentary Under-Secretary of State Department of the Environment, Transport and the Regions

17th March 1999

EXPLANATORY NOTE

(This note is not part of the Order)

This Order makes provision for the purpose of giving effect to the Agreement between the Republic of Estonia, the Republic of Finland and the Kingdom of Sweden regarding the M/S Estonia (Cm 4252). The date of the United Kingdom's accession to the Agreement will be published in the London, Edinburgh and Belfast Gazettes.

The Agreement designates the wreck of the M/S Estonia and surrounding area as the final place of rest for the victims of the disaster. United Kingdom accession to the Agreement is subject to a reservation to article 4(2) which requires that disturbance of the final place of rest be punishable by imprisonment under national law. Accordingly the offences created by this Order (which are subject to section 24(3) of the Merchant Shipping and Maritime Security Act 1997) are punishable by fine.

(A hardcopy of this book has been sent to Ms Glenda Jackson 1998 - No reply of course).